MULTI F
MULTI F MAX

CEILING CASSETTE
INDOOR UNIT
INSTALLATION MANUAL

- LMCN078HV 7 kBtu
- LCN098HV4 9 kBtu
- LCN128HV4 12 kBu
- LCN188HV4 18 kBtu

PROPRIETARY DATA NOTICE

This document, as well as all reports, illustrations, data, information, and other materials are the property of LG Electronics U.S.A., Inc., and are disclosed by LG Electronics U.S.A., Inc., only in confidence. This document is for design purposes only.

⃠ Do not throw away, destroy, or lose this manual.

Please read carefully and store in a safe place for future reference.
Content familiarity required for proper installation.

The instructions included in this manual must be followed to prevent product malfunction, property damage, injury, or death to the user or other people. Incorrect operation due to ignoring any instructions will cause harm or damage. The level of seriousness is classified by the symbols described below.

A summary list of safety precautions begins on page 3.

For more technical materials such as submittals, engineering databooks, and catalogs, visit www.lghvac.com.

Proper sizing and installation of equipment is critical to achieve optimal performance. Split system air conditioners and heat pumps (excluding ductless systems) must be matched with appropriate coil components to meet ENERGY STAR® criteria. Ask your contractor for details or visit www.energystar.gov.

(ENERGY STAR and the ENERGY STAR mark are registered trademarks owned by the U.S. Environmental Protection Agency.)

IMPORTANT - This product has been designed and manufactured to meet ENERGY STAR criteria for energy efficiency when matched with appropriate coil components. However, proper refrigerant charge and proper air flow are critical to achieve rated capacity and efficiency. Installation of this product should follow the manufacturer's refrigerant charging and air flow instructions. **Failure to confirm proper charge and airflow may reduce energy efficiency and shorten equipment life.**

SAFETY INSTRUCTIONS

The instructions below must be followed to prevent product malfunction, property damage, injury or death to the user or other people. Incorrect operation due to ignoring any instructions will cause harm or damage. The level of seriousness is classified by the symbols described below.

TABLE OF SYMBOLS

⚠ DANGER	*This symbol indicates an imminently hazardous situation which, if not avoided, will result in death or serious injury.*
⚠ WARNING	*This symbol indicates a potentially hazardous situation which, if not avoided, could result in death or serious injury.*
⚠ CAUTION	*This symbol indicates a potentially hazardous situation which, if not avoided, may result in minor or moderate injury.*
⚠ NOTE	*This symbol indicates situations that may result in equipment or property damage accidents only.*
Note:	*This symbol indicates information related to the current procedure.*
⃠	*This symbol indicates an action that should not be performed.*

INSTALLATION

⚠ DANGER

⃠ **Don't store or use flammable gas / combustibles near the unit.**
There is risk of fire, explosion, and physical injury or death.

⚠ WARNING

⃠ **Do not install or remove the unit by yourself (end-user). Ask the dealer or a trained technician to install the unit.**
Improper installation by the user will result in water leakage, fire, explosion, electric shock, physical injury or death.

For replacement of an installed unit, always contact an LG trained service provider.
There is risk of fire, electric shock, explosion, and physical injury or death.

The outdoor unit is shipped with refrigerant and the service valves closed. ⃠ Do not open service valves on the unit until all non-condensibles have been removed from the piping system and authorization has been obtained from the commissioning agent.
There is a risk of physical injury or death.

⃠ **Do not run the compressor with the service valves closed.**
There is risk of explosion, physical injury, or death.

Periodically check that the unit is not damaged.
There is risk of explosion, physical injury, or death.

Replace all control box and panel covers.
If cover panels are not installed securely, dust, water and animals will enter the unit, causing fire, electric shock, and physical injury or death.

Wear protective gloves when handling equipment. Sharp edges will cause personal injury.

Always check for system refrigerant leaks after the unit has been installed or serviced.
Exposure to high concentration levels of refrigerant gas will lead to illness or death.

⃠ **Do not install the unit using defective hanging, attaching, or mounting hardware.**
There is risk of physical injury or death.

Dispose of the packing materials safely.
- *Packing materials, such as nails and other metal or wooden parts will cause puncture wounds or other injuries.*
- *Tear apart and throw away plastic packaging bags so that children will not play with them and risk suffocation and death.*

⃠ **Do not install the unit in any location exposed to open flame or extreme heat. ⃠ Do not touch the unit with wet hands.**
There is risk of fire, electric shock, explosion, and physical injury or death.

Install the unit considering the potential for strong winds or earthquakes.
Improper installation will cause the unit to fall, resulting in physical injury or death.

⃠ **Do not change the settings of the protection devices.**
If the pressure switch, thermal switch, or other protection device shorted and forced to operate improperly, or parts other than those specified by LG are used, there is risk of fire, electric shock, explosion, and physical injury or death.

INSTALLATION - CONTINUED

⚠WARNING

If the air conditioner is installed in a small space, take measures to prevent the refrigerant concentration from exceeding safety limits in the event of a refrigerant leak.
Consult the latest edition of ASHRAE (American Society of Heating, Refrigerating, and Air Conditioning Engineers) Standard 15. If the refrigerant leaks and safety limits are exceeded, it could result in personal injuries or death from oxygen depletion.

Properly insulate all cold surfaces to prevent "sweating."
Cold surfaces such as un-insulated piping can generate condensate that could drip, causing a slippery surface that creates a risk of slipping, falling, and personal injury.

⚠CAUTION

Be very careful when transporting the product. Failure to follow these directions will result in minor or moderate physical injury.

- ⃠ *Do not attempt to carry the product without assistance.*
- *Some products use polypropylene bands for packaging.* ⃠ *Do not use polypropylene bands to lift the unit.*
- *Suspend the unit from the base at specified positions.*
- *Support the unit a minimum of four points to avoid slippage from rigging apparatus.*

Note:

Properly insulate all cold surfaces to prevent "sweating."
Cold surfaces such as un-insulated piping can generate condensate that will drip and cause a slippery surface condition and/or water damage to walls.

When installing the unit in a hospital, mechanical room, or similar electromagnetic field (EMF) sensitive environment, provide sufficient protection against electrical noise.
Inverter equipment, power generators, high-frequency medical equipment, or radio communication equipment will cause the air conditioner to operate improperly. The unit will also affect such equipment by creating electrical noise that disturbs medical treatment or image broadcasting.

⃠ **Do not use the product for special purposes such as preserving foods, works of art, wine coolers, or other precision air conditioning applications. This equipment is designed to provide comfort cooling and heating.**
There is risk of property damage.

⃠ **Do not make refrigerant substitutions. Use R410A only.**
If a different refrigerant is used, or air mixes with original refrigerant, the unit will malfunction and become damaged.

⃠ **Do not install the unit in a noise sensitive area.**

When connecting refrigerant tubing, remember to allow for pipe expansion.
Improper piping will cause refrigerant leaks and system malfunction.

⃠ **Don't store or use flammable gas / combustibles near the unit.**
There is risk of product failure.

Take appropriate actions at the end of HVAC equipment life to recover, recycle, reclaim or destroy R410A refrigerant according to applicable U.S. Environmental Protection Agency (EPA) rules.

Periodically check that the unit is not damaged.
There is a risk of equipment damage.

Install the unit in a safe location where no one can step on or fall onto it. ⃠ **Do not install the unit with defective hanging, attaching, or mounting hardware.**
There is risk of unit and property damage.

Install the drain hose to ensure adequate drainage.
There is a risk of water leakage and property damage.

Always check for system refrigerant leaks after the unit has been installed or serviced.
Low refrigerant levels will cause product failure.

The unit is shipped with refrigerant and the service valves closed. ⃠ **Do not open service valves on the unit until all non-condensibles have been removed from the piping system and authorization to do so has been obtained from the commissioning agent.**
There is a risk of refrigerant contamination, refrigerant loss and equipment damage.

⃠ **Do not run the compressor with the service valves closed.**
There is a risk of equipment damage.

WIRING

⚠DANGER

High voltage electricity is required to operate this system. Adhere to the National Electrical Codes and these instructions when wiring.
Improper connections and inadequate grounding can cause accidental injury or death.

Always ground the unit following local, state, and National Electrical Codes.

Turn the power off at the nearest disconnect before servicing the equipment.
Electric shock can cause physical injury or death.

Properly size all circuit breakers or fuses.
There is risk of fire, electric shock, explosion, physical injury or death.

⚠WARNING

The information contained in this manual is intended for use by an industry-qualified, experienced, trained electrician familiar with the U.S. National Electric Code (NEC) who is equipped with the proper tools and test instruments.
Failure to carefully read and follow all instructions in this manual can result in equipment malfunction, property damage, personal injury or death.

All electric work must be performed by a licensed electrician and conform to local building codes or, in the absence of local codes, with the National Electrical Code, and the instructions given in this manual.
If the power source capacity is inadequate or the electric work is not performed properly, it will result in fire, electric shock, physical injury or death.

Ensure the system is connected to a dedicated power source that provides adequate power.
If the power source capacity is inadequate or the electric work is not performed properly, it will result in fire, electric shock, physical injury or death.

Refer to local, state, and federal codes, and use power wires of sufficient current capacity and rating.
Wires that are too small will generate heat and cause a fire.

Secure all field wiring connections with appropriate wire strain relief.
Improperly securing wires will create undue stress on equipment power lugs. Inadequate connections will generate heat, cause a fire and physical injury or death.

Properly tighten all power connections.
Loose wiring will overheat at connection points, causing a fire, physical injury or death.

⃠ Do not change the settings of the protection devices.
If the protection devices have been bypassed or are forced to operate improperly, or parts other than those specified by LG are used, there is risk of fire, electric shock, explosion, and physical injury or death.

Note:

⃠ Do not cut, lengthen or shorten the communications and power cable between any dry contact unit and its connected indoor unit. ⃠ Do not install the unit in a location where the communications and power cable cannot be safely and easily connected between the two units. ⃠ Do not allow strain on this cable.
Poor cable connections can cause equipment malfunction.

The information contained in this manual is intended for use by an industry-qualified, experienced, certified electrician familiar with the U.S. National Electric Code (NEC) who is equipped with the proper tools and test instruments.
Failure to carefully read and follow all instructions in this manual can result in equipment malfunction and property damage.

OPERATION

⚠DANGER

⊘ Do not provide power to or operate the unit if it is flooded or submerged.
There is risk of fire, electric shock, physical injury or death.

Use a dedicated power source for this product.
There is risk of fire, electric shock, physical injury or death.

⊘ Do not operate the disconnect switch with wet hands.
There is risk of fire, electric shock, physical injury or death.

Periodically verify that the hardware securing the unit has not deteriorated.
If the unit falls from its installed location, it can cause physical injury or death.

If refrigerant gas leaks out, ventilate the area before operating the unit.
If the unit is mounted in an enclosed, low-lying, or poorly ventilated area and the system develops a refrigerant leak, it will cause fire, electric shock, explosion, physical injury or death.

⚠WARNING

⊘ Do not allow water, dirt, or animals to enter the unit.
There is risk of unit failure, fire, electric shock, physical injury or death.

⊘ Avoid excessive cooling and periodically perform ventilation to the unit.
Inadequate ventilation is a health hazard.

⊘ Do not touch refrigerant piping during or after operation.
It can cause burns or frostbite.

⊘ Do not operate the unit with the panel(s) or protective cover(s) removed; keep fingers and clothing away from moving parts.
The rotating, hot, cold, and high-voltage parts of the unit can cause physical injury or death.

Periodically verify the equipment mounts have not deteriorated.
If the base collapses, the unit could fall and cause physical injury or death.

Periodically check power cable and connection for damage.
Cable must be replaced by the manufacturer, its service agent, or similar qualified persons in order to avoid physical injury and/or electric shock.

Securely attach the electrical cover to the unit.
Non-secured electrical covers can result in burns or electric shock due to dust or water in the service panel.

⊘ Do not open the inlet grille of the unit during operation. ⊘ Do not operate the unit with the panels or guards removed. ⊘ Do not insert hands or other objects through the inlet or outlet when the unit is powered. ⊘ Do not touch the electrostatic filter, if the unit includes one.
The unit contains sharp, rotating, hot, and high voltage parts that can cause personal injury and/or electric shock.

Ensure no power is connected to the unit other than as directed in this manual. Remove power from the unit before removing or servicing the unit.
There is risk of unit failure, fire, electric shock, physical injury or death.

⚠CAUTION

⊘ To avoid physical injury, use caution when cleaning or servicing the air conditioner.

Note:

Clean up the site after installation is finished, and check that no metal scraps, screws, or bits of wiring have been left inside or surrounding the unit.

⊘ Do not use this equipment in mission critical or special-purpose applications such as preserving foods, works of art, wine coolers or refrigeration. This equipment is designed to provide comfort cooling and heating.

Provide power to the compressor crankcase heaters at least six (6) hours before operation begins.
Starting operation with a cold compressor sump(s) will result in severe bearing damage to the compressor(s). Keep the power switch on during the operational season.

⊘ Do not block the inlet or outlet.
Unit will malfunction.

Securely attach the electrical cover to the indoor unit.
Non-secured covers can result in fire due to dust or water in the service panel.

Periodically verify the equipment mounts have not deteriorated.
If the base collapses, the unit could fall and cause property damage or product failure.

⊘ Do not allow water, dirt, or animals to enter the unit.
There is risk of unit failure.

Oil, steam, sulfuric smoke, etc., can significantly reduce the performance of the unit, or damage its parts.

Use a only soft cloth to clean the air conditioner. ⊘ Do not use wax, thinner, or strong detergents.
Strong cleaning products will damage the surface of the air conditioner, or will cause its appearance to deteriorate.

TABLE OF CONTENTS

UNIT NOMENCLATURE

Multi F Multi-Zone Systems — Indoor Units

L	M	CN	078	HV	4

L = LG

Frame Type:
M = Multi-Zone
A/S = Single Zone (Gen 4, 5 Single Zone units also compatible with Multi Zone)

Component:
AN: Art Cool™ Wall-Mounted Indoor Unit
N: Standard Wall-Mounted Indoor Unit
CN: Four-Way Ceiling-Cassette Indoor Unit
DN: Ceiling-Concealed Duct (Low Static) Indoor Unit
HN: Ceiling-Concealed Duct (High Static) Indoor Unit
QN: Console
VN: Vertical-Horizontal Air Handling Indoor Unit

Nominal Capacity
(Nominal cooling capacity in Btu/h):

078 = 7,000
098 = 9,000
128 = 12,000
188 = 18,000

Features:
H = Heat Pump
S = High Efficiency
V = Inverter
T = High Wall-Mounted Indoor Unit
P = Art Cool Gallery Indoor Unit

Generation or Revision
1 = First
2 = Second
3 = Third
4 = Fourth or Multi-compatible

• Voltage for all equipment is 208-230V, 60 Hz, 1-phase.
• All indoor units are compatible with wired controllers

Multi F and Multi F MAX Ceiling Cassette Units

This manual describes how to install the LG Multi F and Multi F MAX (Multi Zone) Ceiling Cassette Indoor Units (IDU) for Multi F heat pump systems. The table below lists the available models. Refer to LG's Multi F Indoor Unit Engineering Manual for complete detailed engineering data and selection procedures.

Figure 1: Multi F LCN188HV4 Ceiling Cassette Indoor Unit.

Safety

Safety of personnel is the primary concern during all procedures. Read and understand the safety summary at the front of this manual. Read and understand this installation procedure before beginning installation. Use the appropriate tools and accessories during installation. Plan your work and ⃠ do not work alone, if possible. Know how to obtain emergency medical and fire fighting assistance.

Installation Personnel

This equipment is intended for installation by personnel trained in the required construction, mechanical, electrical, and/or other disciplines.

⚠WARNING

Installation work must be performed by trained personnel and in accordance with national wiring standards and all local or other applicable codes. Improper installation can result in fire, electric shock, physical injury, or death.

Note:

Please read all instructions before installing this product. Become familiar with the unit's components and connections, and the order of installation. Incorrect installation can degrade or prevent proper operation.

Required Parts (field provided)

- Connecting cable (power and control)
- Pipes - vapor line and liquid line, with insulation
- 3/8" or 1/2" Threaded hanger rods
- 3/8" or 1/2" nuts, flat washers, and lock / split washers
- Additional drain hose
- Insulation for additional drain hose

Table 1: Multi F Ceiling Cassette Indoor Units.

Typical Unit	Model Number	Nominal Capacity	
		Cooling (Btu)	Heating (Btu)
	LMCN078HV	7,000	8,100
	LCN098HV4	9,000	10,400
	LCN128HV4	12,000	13,800
	LCN188HV4	18,000	20,800

Table 2: Included Items.

Part	Quantity	Image	Part	Quantity	Image
Drain Hose	One (1)		Cable Ties	Four (4)	
Metal Clamp	Two (2)		Conduit Bracket	One (1)	
Insulation for Fittings	One (1) Set	For Vapor Piping For Liquid Piping	M4 Screws	Two (2)	
Washers for Hanging Bracket	Eight (8)		Wireless Handheld Controller with Holder (PQWRHQ0FDB)[1]	One (1)	
Connectors (included only for single-zone system installations)	One (1) Each for Ø3/8 inch → Ø 1/2 inch One (1) Each for Ø5/8 inch → Ø 1/2 inch One (1) Each for Ø1/4 inch → Ø 3/8 inch				

[1]Wireless Handheld Controller for the four-way ceiling cassette indoor units is also referenced by Model No.AKB73757604.

Table 3: Required Accessory Table.

Part	Quantity	Image
Four-Way Ceiling Cassette Grille Kit (PT-QAGW0 [2x2])	One (1)	

R410A Refrigerant

R410A refrigerant has a higher operating pressure in comparison to R22 refrigerant. All piping system materials installed must have a higher resisting pressure than the materials traditionally used in R22 systems.

R410A refrigerant is an azeotrope of R32 and R125, mixed at 50:50. The ozone depletion potential (ODP) is 0.

⚠WARNING

- *Do not place refrigerant cylinder in direct sunlight. Refrigerant cylinder will explode causing severe injury or death.*

Note

- *Because R410A is a combination of R32 and R125, the required additional refrigerant must be charged in its liquid state. If the refrigerant is charged in its gaseous state, its composition changes and the system will not work properly.*
- *Do not heat piping more than necessary during installation. Piping will become soft and fail when pressurized.*
- *Do not use any piping that has not been approved for use in high-pressure refrigerant systems. Piping wall thickness must comply with the applicable local, state, and federal codes for the 551 psi design pressure of R410A. Inadequate piping will fail when pressurized.*

Multi F Ceiling Cassette Indoor Unit

Table 4: Multi F Multi Zone Ceiling Cassette Indoor Unit Specifications.

Model Name	LMCN078HV	LCN098HV4	LCN128HV4	LCN188HV4
Grille (Sold Separately)	PT-QAGW0	PT-QAGW0	PT-QAGW0	PT-QAGW0
Nominal Cooling Capacity (Btu/h)[1]	7,000	9,000	12,000	18,000
Nominal Heating Capacity (Btu/h)[1]	8,100	10,400	13,800	20,800
Operating Range				
Cooling (°F WB)	57-77			
Heating (°F DB)	59-81			
Fan				
Type	Turbo			
Motor Output (W) x Qty.	43 x 1			
Motor/Drive	Brushless Digitally Controlled / Direct			
Airflow Rate CFM (H/M/L)	265 / 212 / 177	300 / 265 / 230	335 / 283 / 247	459 / 424 / 388
Unit Data				
Refrigerant Type[2]	R410A			
Refrigerant Control	EEV			
Power Supply V, Ø, Hz[3]	208-230, 1, 60			
Rated Amps (A)	0.25			
Sound Pressure Level ±3 dB(A) (H/M/L)[4]	31 / 27 / 24	36 / 33 / 30	38 / 35 / 32	41 / 39 / 36
Body Dimensions (W x H x D, in.)	22-7/16 x 8-7/16 x 22-7/16			22-7/16 x 10-3/32 x 22-7/16
Grille (Sold separately) Dimensions (WxHxD, in.)	24-13/32 x 1-11/32 x 24-13/32			
Body Net Weight (lbs.)	26	29		32
Grille (Sold separately) Net Weight (lbs.)	7			
Body Shipping Weight (lbs.)	31	34		39
Grille (Sold separately) Shipping Weight (lbs.)	9			
Power Wiring / Communications Cable (No. x AWG)[5]	4 x 14			
Heat Exchanger (Row x Column x Fin / inch) x No.	(1 x 8 x 18) x 1	(2 x 8 x 18) x 1		(2 x 10 x 18) x 1
Pipe Size				
Liquid (in.)	1/4			
Vapor (in.)	3/8			1/2
Connection Size				
Liquid (in.)	1/4			
Vapor (in.)	3/8			1/2
Drain O.D. / I.D. (in.)	1-1/4, 1			

[1]Nominal capacity is rated 0 ft. above sea level with corresponding refrigerant piping length in accordance with standard length of each outdoor unit and a 0 ft. level difference between outdoor and indoor units. All capacities are net with a combination ratio between 95 – 105%.

Nominal cooling capacity rating obtained with air entering the indoor unit at 80ºF dry bulb (DB) and 67ºF wet bulb (WB) and outdoor ambient conditions of 95ºF dry bulb (DB) and 75ºF wet bulb (WB).

Nominal heating capacity rating obtained with air entering the indoor unit at 70ºF dry bulb (DB) and 60ºF wet bulb (WB) and outdoor ambient conditions of 47ºF dry bulb (DB) and 43ºF wet bulb (WB).

[2]This unit comes with a dry helium charge.

[3]Acceptable operating voltage: 187V-253V.

[4]Sound pressure levels are tested in an anechoic chamber under ISO Standard 3745 and are the same in both cooling and heating mode. These values can increase due to ambient conditions during operation.

[5]All power wiring / communications cable to the IDUs be minimum 14 AWG, 4-conductor, stranded, shielded or unshielded (if shielded, must be grounded to chassis at ODU only) and must comply with applicable local and national codes.

Figure 2: LMCN078HV, LCN098HV4, and LCN128HV4 Dimensions.

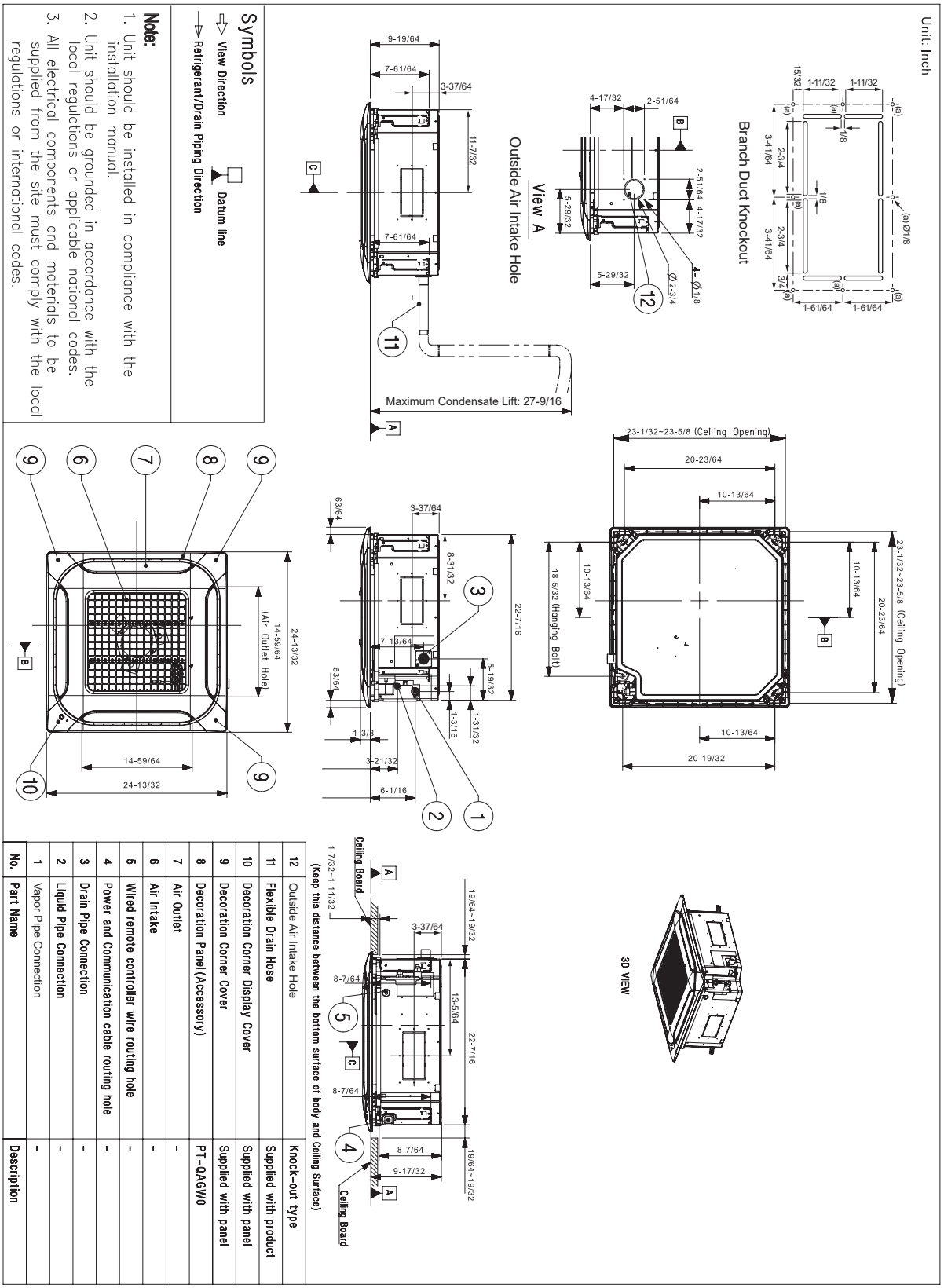

No.	Part Name	Description
12	Outside Air Intake Hole	Knock-out type
11	Flexible Drain Hose	Supplied with product
10	Decoration Corner Display Cover	Supplied with panel
9	Decoration Corner Cover	Supplied with panel
8	Decoration Panel(Accessory)	PT-QAGW0
7	Air Outlet	-
6	Air Intake	-
5	Wired remote controller wire routing hole	-
4	Power and Communication cable routing hole	-
3	Drain Pipe Connection	-
2	Liquid Pipe Connection	-
1	Vapor Pipe Connection	-

Multi F Ceiling Cassette Indoor Unit

Figure 3: LCN188HV4 Dimensions.

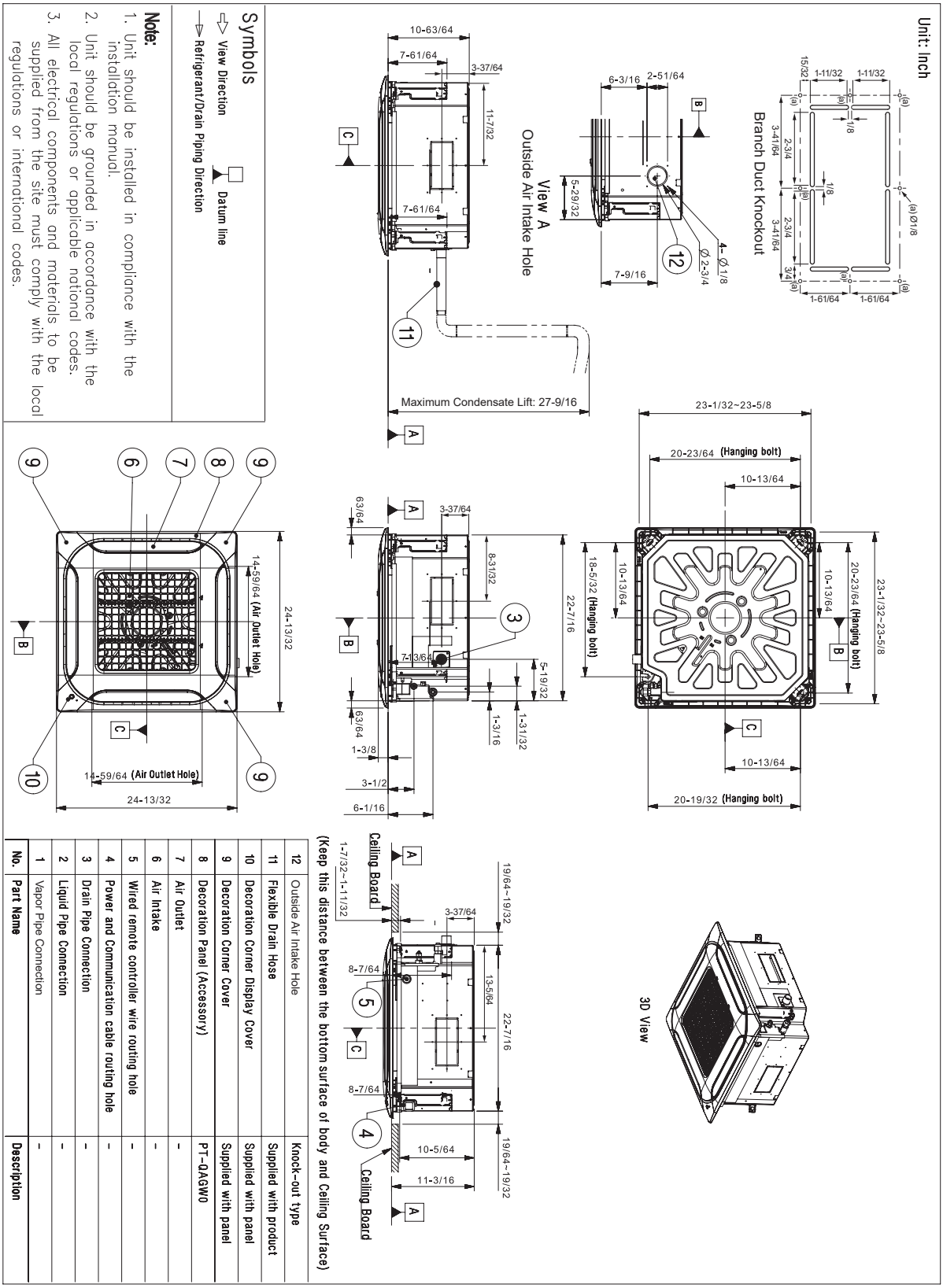

No.	Part Name	Description
12	Outside Air Intake Hole	Knock-out type
11	Flexible Drain Hose	Supplied with product
10	Decoration Corner Display Cover	Supplied with panel
9	Decoration Corner Cover	Supplied with panel
8	Decoration Panel (Accessory)	PT-QAGW0
7	Air Outlet	-
6	Air Intake	-
5	Wired remote controller wire routing hole	-
4	Power and Communication cable routing hole	-
3	Drain Pipe Connection	-
2	Liquid Pipe Connection	-
1	Vapor Pipe Connection	-

Figure 4: Multi F Four-Way Ceiling-Cassette Indoor Unit Refrigerant Flow Diagram.

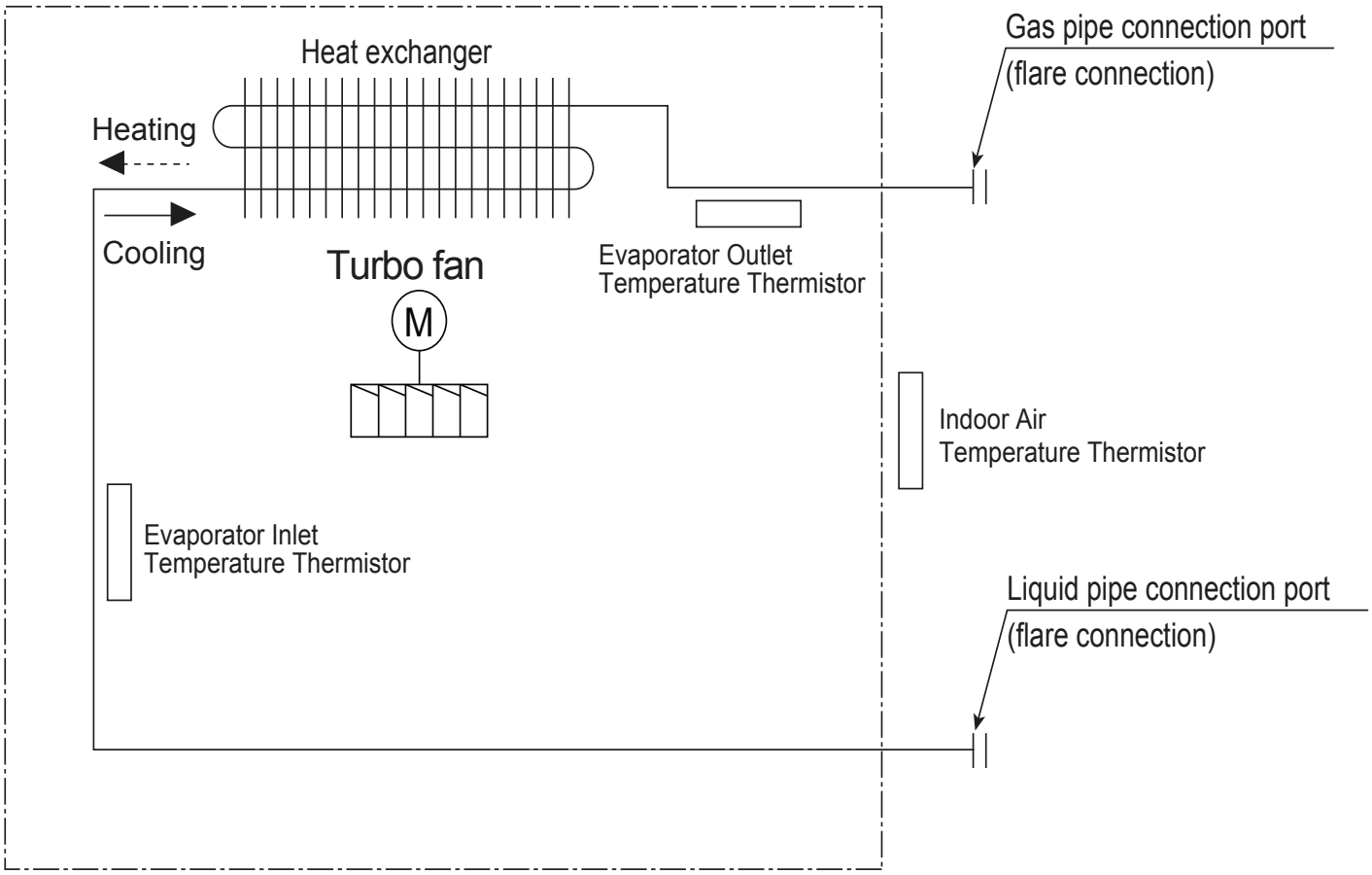

Table 5: Multi F Four-Way Ceiling-Cassette Indoor Unit Refrigerant Pipe Sizes.

Model No.	Vapor (inch)	Liquid (inch)
LMCN078HV	Ø3/8	Ø1/4
LCN098HV4		
LCN128HV4		
LCN188HV4	Ø1/2	

Table 6: Multi F Four-Way Ceiling-Cassette Indoor Unit Refrigerant Pipe Connections.

Model No.	Vapor (inch)	Liquid (inch)
LMCN078HV	Ø3/8	Ø1/4
LCN098HV4		
LCN128HV4		
LCN188HV4	Ø1/2	

Table 7: Multi F Four-Way Ceiling-Cassette Indoor Unit Thermistor Details.

Description (Based on Cooling Mode)	PCB Connector
Indoor Air Temperature Thermistor	CN-ROOM
Evaporator Inlet Temperature Thermistor	CN-PIPE/IN
Evaporator Outlet Temperature Thermistor	CN-PIPE/OUT

Unpack and Inspect for Freight Damage

⚠ CAUTION

Shipping and net weights of the ceiling cassette units are listed in the specifications table. To help avoid injury to personnel, use two people when carrying a unit by hand.

Note:

- *Shipping and net weights of the ceiling cassette units are listed in the specification tables in the beginning of this manual. To help avoid damage to the unit, use at least two people when carrying a unit by hand.*
- *Before opening the shipping container, check the container labeling to verify the unit received is the correct unit. Verify the unit capacity, type, and voltage. Refer to the "Unit Nomenclature" chart in the beginning of this manual.*
- *After opening, if the unit is damaged, repack the unit as it was shipped to you. RETAIN ALL PACKING MATERIALS. In general, freight damage claims will be denied if the original packing materials are not retained for the claims adjustor to inspect. Contact your supervisor on how to proceed with filing a freight claim and to order a replacement unit.*
- *To avoid damaging the indoor unit, ⃠ do not unpack the unit and remove the protective materials until it is ready to install. Before unpacking, carefully move the packaged unit to a work area near the installation location.*

Unpack and Inspect for Freight Damage

1. Before opening the shipping container, verify the correct unit is included as described in the note above.
2. Place the box on a solid surface right side up.
3. Cut the white reinforced nylon straps.
4. Open the box and fold back all four flaps.
5. Remove any protective cardboard / Styrofoam® top sheets and place to the side.
6. The walls and top panels are not attached to the bottom of the box. Lift the cardboard carton by the flaps and remove the box walls and top and place it to the side.
7. Remove the moisture barrier plastic bonnet.
8. Check the unit nameplate data and model number. Verify the unit voltage, and capacities are correct before proceeding.
9. Locate and retain all included parts and accessories in the box.
10. Using two people, carefully lift the unit and inspect for freight damage. ⃠ DO NOT lift by the refrigerant piping or drain pipe stub. Lift by the frame only. If damage is found, repack the unit as it was received in the original container.

Location Selection

Note:
Follow required best practices when choosing a location for the ceiling cassette indoor units (IDU).

⚠DANGER

To avoid the possibility of fire, ⃠ do not install the unit in an area where combustible gas will generate, flow, stagnate, or leak. Failure to do so will cause serious bodily injury or death. Before beginning installation, read the safety summary at the beginning of this manual.

Figure 6: Indoor Unit Clearance Requirements.

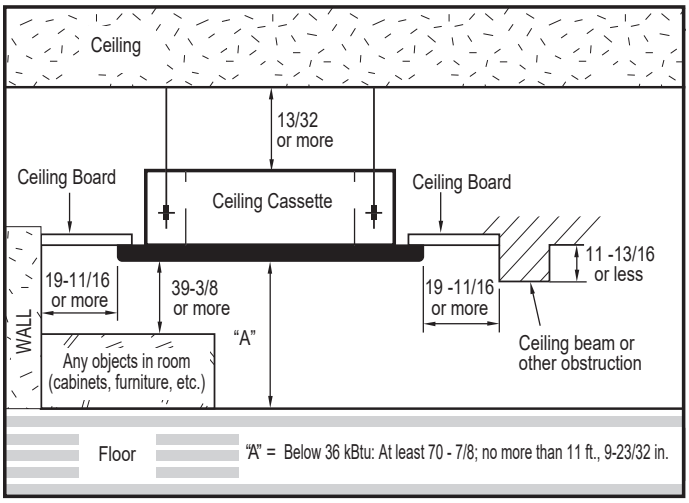

Unit: Inch

Do's

Select a location for installing the ceiling cassette indoor unit that meets the following conditions.

- Place in an area that is level and with enough strength to bear the weight of the indoor unit.
- Place the unit where air circulation will not be blocked.
- Place the unit where operating sound from the unit will not disturb occupants.
- Include enough space for service access.
- Place the indoor unit in a location where it can be easily connected to the outdoor unit / branch distribution unit.
- Place the unit where drainage can be obtained easily and to minimize the length of the condensate drain piping; include space for drainage to ensure condensate flows properly out of the unit when it is in cooling mode.
- Ensure there is sufficient space from the ceiling and floor.
- Place the unit in a location where electrical noise / electromagnetic waves will not impact operation. Maintain proper distances between the indoor units and electric wires, audio and visual appliances, breaker / circuit panels, etc.
- Use the provided pattern to determine the size of the ceiling opening and the hanging bolt locations required by the unit.

⃠ Do Not's

- *The unit should not be installed near a heat or steam source, or where considerable amounts of oil, iron powder, or flour are used.*
- *No obstacles to air circulation around the unit; keep proper distances from ceilings, doorways, floor, walls, etc.*
- *The unit should not be installed in an area where sulfuric acid and flammable or corrosive gases are generated, flowed, vented into, stagnate, leak, or stored.*
- *The unit should not be installed in a location where acidic solution and spray (sulfur) are often used.*
- *Avoid installing the unit near high-frequency generators or near any equipment that generates an electromagnetic field (minimum 3-1/3 feet away)*
- *Do not install the unit near a doorway.*

Figure 5: Installing Near a Heat or Steam Source.

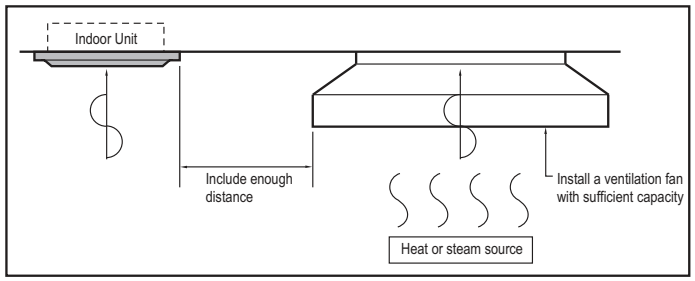

⚠WARNING

The unit must not be installed where sulfuric acid and flammable or corrosive gases are generated, vented into, or stored. There is risk of fire, explosion, and physical injury or death.

⚠ NOTE

- *Indoor units (IDUs) must not be placed in an environment where the IDUs will be exposed to harmful volatile organic compounds (VOCs) or in environments where there is improper air make up or supply or inadequate ventilation. If there are concerns about VOCs in the environment where the IDUs are installed, proper air make up or supply and/or adequate ventilation must be provided. Additionally, in buildings where IDUs will be exposed to VOCs, consider a third party factory-applied epoxy coating to the fan coils for each IDU where the entire coil is dipped, not sprayed.*
- *If the unit is installed near a body of water, the installation parts are at risk of corroding. Appropriate anti-corrosion methods must be taken for the unit and all installation parts.*

The unit will be damaged, will malfunction, and / or will not operate as designed if installed in any of the conditions listed.

Installing in an Area Exposed to Unconditioned Air

In some installation applications, areas (floors, walls) in some rooms will be exposed to unconditioned air (room will be above or next to an unheated garage or storeroom). To countermeasure:

- Verify that carpet is or will be installed (carpet will increase the temperature by three (3) degrees).
- Add insulation between the floor joists.
- Install radiant heat or another type of heating system to the floor.

Installing in a High or Dropped Ceiling

High or dropped ceilings, often found in commercial buildings and offices, will cause a wide temperature differentiation. To countermeasure:

- Change the indoor unit mode selection to allow for higher ceilings (see table).
- Install an air circulator.
- Set the air discharge outlet so that heated air flows in a downward direction.
- Use a dual door system to protect the building gate or exit.

Table 8: Ceiling Cassette Indoor Unit High Ceiling Mode Selection Options.

Ceiling Height	Mode Selection
≤7-1/2 feet	Low Ceiling
7-1/2 feet to 8-7/8 feet	Standard
8-7/8 feet to 10-3/16 feet	High Ceiling
10-3/16 feet to 11-13/16 feet	Very High Ceiling

Installing in an Area with High Humidity Levels

If the environment is prone to humidity levels of 80% or more (near the ocean, lakes, etc.) or where steam could collect in the plenum:

- Install additional insulation to the indoor unit (glass wool insulation >13/32 inches thick).
- Install additional insulation to the refrigerant piping (insulation >13/16 inches thick).
- Seal all gaps between the indoor unit and the ceiling tiles (make the area air tight) so that humidity does not transfer from the plenum to the conditioned space. Also, add a ceiling grille for ventilation.

Figure 7: Installing in a Highly Humid Location.

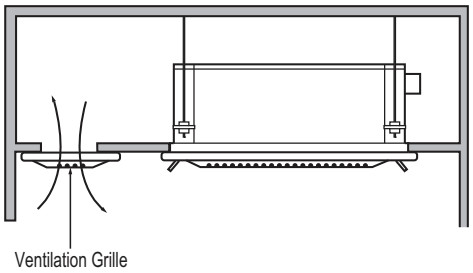

Installing Multiple Indoor Units in One Area

Ensure there is enough space between indoor units, lighting fixtures, and ventilation fans / systems.

Figure 8: Installing Multiple Indoor Units.

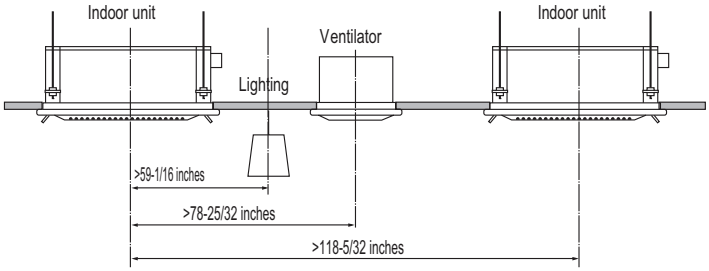

Preparing the Installation Area

1. Cassette indoor units include installation guides (templates) that depict the exact dimensions necessary for the ceiling opening. One is a paper template that is found in the cassette indoor unit shipping materials; the other template is the cardboard on the bottom of the packaging.
2. Using one of the templates, choose the location for the indoor unit. Mark where the four (4) suspension / hanger bolts, refrigerant piping, and drain hose should be. Suspension bolt angle must account for drain direction.
3. Drill holes for the four (4) suspension / hanger bolts.

Note:
For easier installation, attach the accessories (except for the decoration panel) before hanging the indoor unit.

Figure 9: Cassette Indoor Unit Templates.

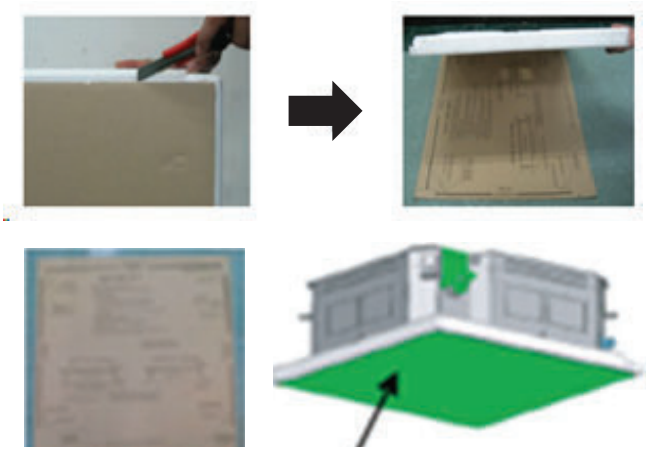

Figure 10: Drilling Holes Using Template.

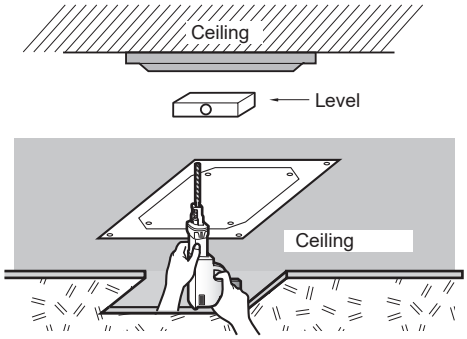

Figure 11: Ceiling Opening Dimensions and Bolt Locations.

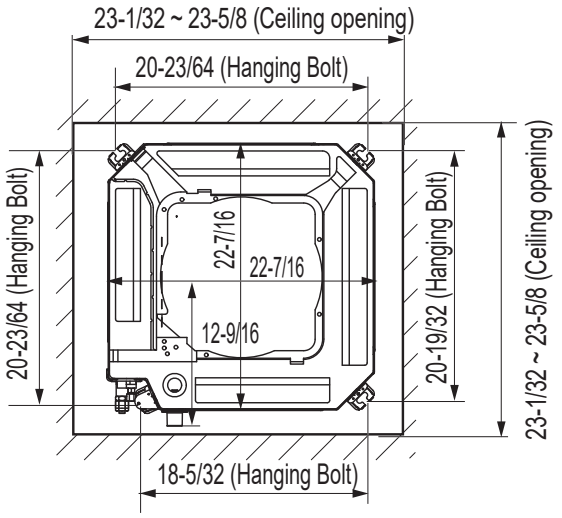

Panel size : 24-13/32 x 24-13/32 Unit: Inch

⚠ WARNING

- *The threaded rod hangars (bolts) and hardware must be securely installed to prevent the frame falling from its location. There is risk of personnel injury from falling equipment.*
- *Using two nuts to prevent self loosening is highly recommended. There is risk of personnel injury from falling equipment.*
- *Installation work must be performed by trained personnel and in accordance with all local or other applicable codes. There is risk of personnel injury from incorrect installation.*
- *During installation, ⃠ do not damage the cable / wiring. There is a risk of electrical shock, fire, physical injury and / or death.*

Hanging the Indoor Unit

The following parts are field supplied:

- Hanging bolt - W-3/8” or M10
- Nut - W-3/8” or M10
- Spring washer - M10

The following parts are included with the indoor unit:

- Flat washer - M10

Figure 12: Installing the Hanging Bolt in the Ceiling.

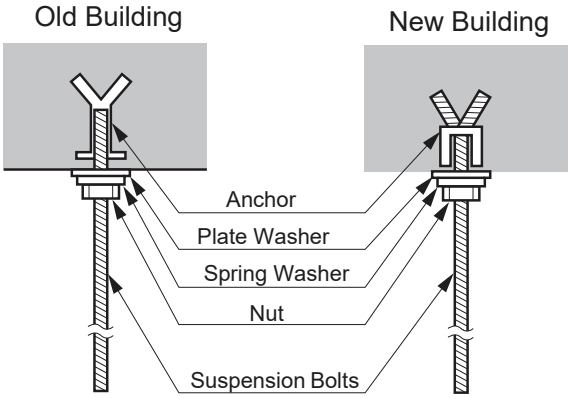

Figure 13: Installation Diagram.

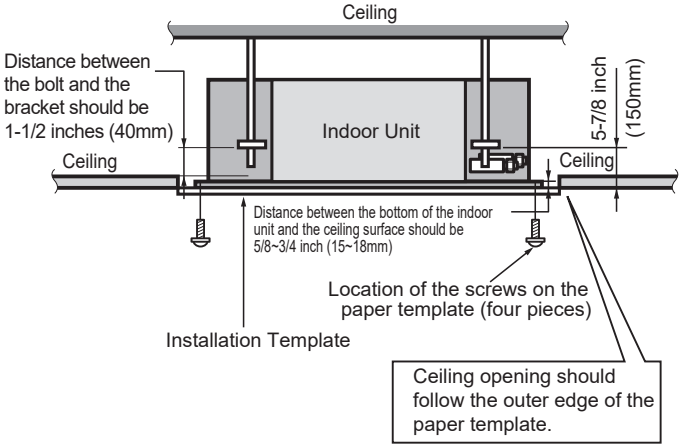

For New Ceilings

1. Use a sunken insert, a sunken anchor, or any other field-supplied part to reinforce the ceiling so that it can bear the weight of the indoor unit. Use a temporary washer plate to more easily set up the unit suspension location.
2. Ceiling height is shown on the side of the installation guide (template). Adjust the height of the unit accordingly. Adjust the clearance before hanging the indoor unit.
3. Refer to the installation guide (template) for the dimensions to the ceiling opening. Match the center of the indoor unit (labeled) to the center indicated on the installation guide.
4. Align the installation guide (template) with the label attached to the unit (affixing the template to the unit if desired) to properly place the unit.
5. Remove the temporary washer plate and position the indoor unit hanger brackets on the bolts. Secure with nuts and washers on the top and bottom of the hanger brackets.
6. Ceiling-cassette indoor units are equipped with a built-in drain pump and float switch, therefore, the unit must be installed horizontally or condensate will drip out and cause product malfunction. Measure the unit at each corner to verify that it is level.
7. Remove the installation guide (template).

Figure 14: Hanging the Indoor Unit.

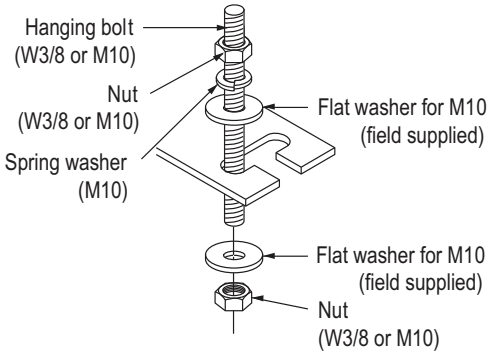

⚠ WARNING

- *The threaded rod hangars (bolts) and hardware must be securely installed to prevent the frame falling from its location. There is risk of personnel injury from falling equipment.*
- *Using two nuts to prevent self loosening is highly recommended. There is risk of personnel injury from falling equipment.*

For Existing Ceilings

1. Use anchors when installing the indoor unit in an existing ceiling.
2. Ceiling height is shown on the side of the installation guide (template). Adjust the height of the unit accordingly. Adjust the clearance before hanging the indoor unit.
3. Remove the temporary washer plate and position the indoor unit hanger brackets on the bolts. Secure with nuts and washers on the top and bottom of the hanger brackets.
4. Ceiling-cassette indoor units are equipped with a built-in drain pump and float switch, therefore, the unit must be installed horizontally or condensate will drip out and cause product malfunction. Measure the unit at each corner to verify that it is level.
5. Remove the installation guide (template).

Drilling the Piping Hole

Follow all piping clearance recommendations.

1. Using a 2-3/4 inch hole core drill bit, drill a hole following installation guidelines and application needs.

• The slant of the hole must be 3/16 inches to 5/16 inches from level with the slant being upward on the indoor unit side and downward on the outdoor unit side.

2. Finish off the newly drilled hole as shown with bushing and sleeve covering to prevent damage to the insulation and piping.

Figure 17: Drilling the Piping Hole.

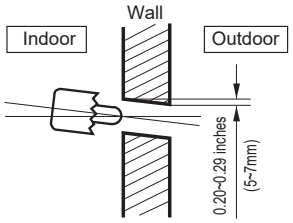

Drill the piping access hole slightly tilted to the outdoor side using a Ø2-5/8 inch hole-core drill.

Preparing for Electrical Connections

1. To access the terminal block, remove the metal control box cover by unscrewing the two (2) screws that hold it in place. Set aside the control box cover and screws for reattachment.

2. Insert the power wiring / communications cable from the outdoor unit or branch distribution unit (Multi F MAX [Standard or LGRED] systems only) through its designated access holes in the sides of the indoor unit and control box to prevent damage. To prevent electromagnetic interference and product malfunction, leave a space between the power wiring and communications cable outside of the indoor unit. If using a conduit, attach it to the conduit mounting plate at the access hole, and secure with a lock nut.

Figure 15: Power Wiring and Communications Cable Connection Access.

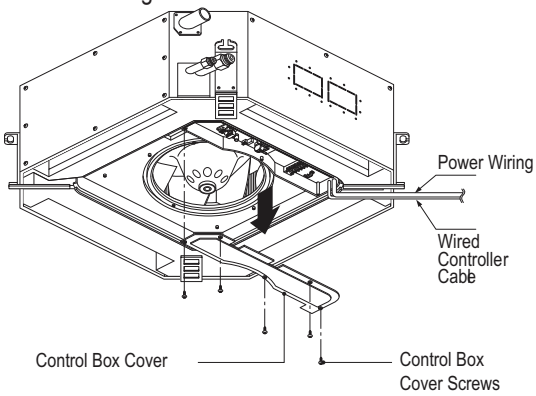

Note:

See the Electrical section for more information.

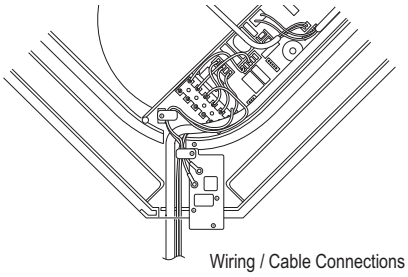

Preparing the Indoor Unit For Conduit Use

1. Remove the rubber stopper on the indoor unit. Pass the power wiring / communications cable through the conduit, the conduit mounting plate, and to / through the control panel of the indoor unit.

2. Tighten the conduit and the conduit mounting plate together.

3. Connect the power wiring / communications cable to the indoor unit terminal block.

4. Screw the conduit mounting plate to the indoor unit.

Figure 16: Using a Conduit.

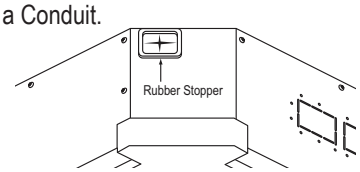

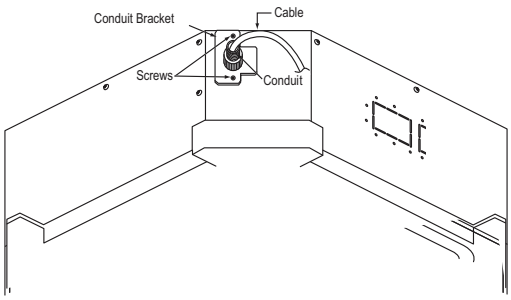

Using a Conduit for Indoor Unit Wiring / Cable Installation

Note:

Use a liquidtight 3/4 inch elbow connector for flexible conduit to protect the communication / connection (power) cable.

1. Indoor unit includes a conduit bracket that can be found in the accessory kit. Assemble the conduit and bracket with a grommet and washer (field-supplied or included with the elbow connector).
2. Guide communication / connection (power) cable insulation into the conduit.
3. Attach the conduit / bracket assembly to the indoor unit using the screws found in the accessory kit.

Figure 18: Liquidtight 3/4 Inch Elbow Connector Attached to Flexible Conduit.

Note:

Check local, state, and federal codes when choosing a conduit size.

4. To protect the piping, condensate drain, and conduit from the elements, add a lineset cover from the indoor access hole to the outdoor unit.

Note:

If a conduit is not used, see below for bundling information.

Bundling

If a conduit or piping set cover is not used on the connection from the outdoor unit to the interior, bundle both separately insulated refrigerant pipes, the drain hose, and outdoor unit to indoor unit communication / connection (power) cable together with wide vinyl tape.

1. Both piping must be fully and separately encased in insulation material: Overlap the field installation piping insulation material and the indoor unit piping insulation material.
2. Bind together the two pipes, using vinyl tape. Make sure there are no gaps during the binding. Verify that any insulation material cutting lines are placed upward.
3. Bind together the two pipes, using narrow vinyl tape. Make sure there are no gaps during the binding.
4. Continue to wrap the indoor unit pipe as connected to the outdoor connection pipe.
5. Using a wider vinyl tape, bundle the piping and drain hose together.
   - Tape must be sufficient to cover the piping in order to fit into the rear piping housing area at the back of the indoor units.

Figure 19: Bundling the Connection Components (From Outdoor Unit to Indoor Unit).

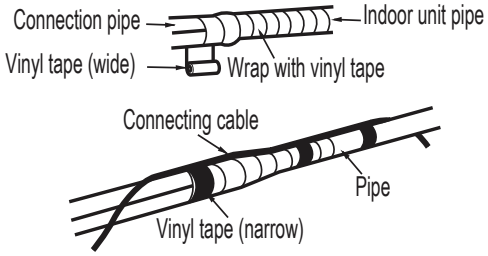

Figure 20: Cut Line Position.

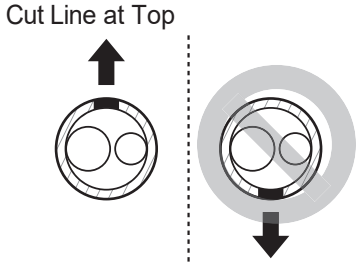

Note

- *Always include insulation on all refrigerant and drain hose to ensure condensate does not form and cause damage to walls, floors, etc.*
- *Positioning the drain hose at the top of the bundle can cause condensate to overflow from the drain pan in the inside of the indoor unit.*

Figure 21: Cutaway of Proper Pipe and Cable Bundling.

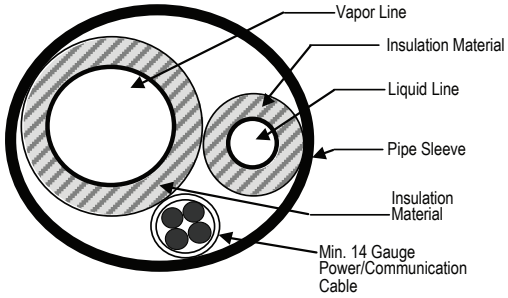

Flaring Procedure

One of the main causes of refrigerant leaks is a defective connection. For LG HVAC systems, the installer needs to know how perform flared connections successfully.

Note:

- *During installation, it is imperative to keep the piping system free of contaminants and debris such as copper burrs, slag, or carbon dust.*
- *⃠ Do not use kinked pipe caused by excessive bending in one specific area on its length.*
- *When selecting flare fittings, always use a 45° fitting rated for use with high pressure refrigerant R410A. Selected fittings must also comply with local, state, or federal standards.*

1. Cut the pipe to length.
   - Measure the distance between the indoor unit and the outdoor unit.
   - Cut the pipes a little longer than measured distance.

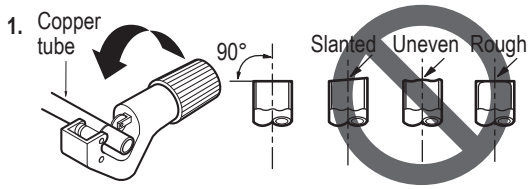

2A. Remove the burrs.
   - Completely remove all burrs from pipe ends.
   - When removing burrs, point the end of the copper pipe down to avoid introducing foreign materials in the pipe.

2B. Slide the flare nut onto the copper tube.

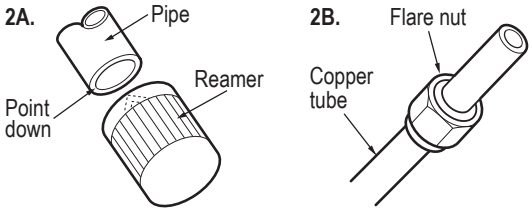

3. Flaring the pipe end.
   - Use the proper size flaring tool to finish flared connections as shown.
   - ALWAYS create a 45° flare when working with R410A.

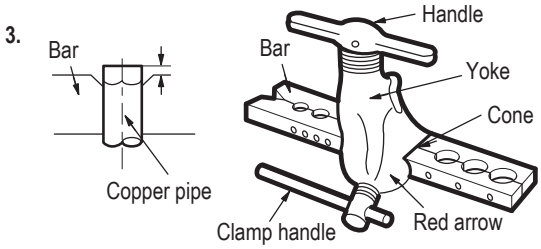

4. Carefully inspect the flared pipe end.
   - Compare the geometry with the figure to the right
   - If the flare is defective, cut it off and re-do procedure.
   - If flare looks good, blow the pipe clean with dry nitrogen.

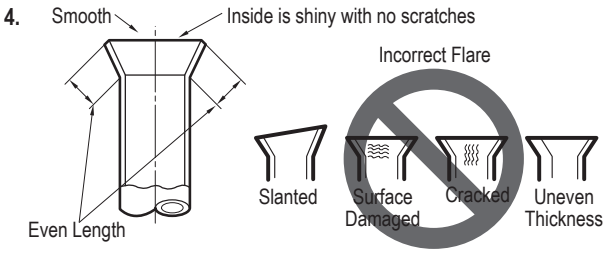

Dimensions of the Flare.

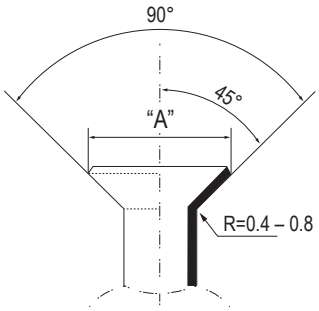

Flared Connection Dimensions / Tightening Torque.

Pipe Size (in. O.D.)	Outside Diameter (mm)	"A" Dimension (mm [in.])
1/4	6.35	~ 9.1 (11/32 - 23/64)
3/8	9.52	~ 13.2 (1/2 - 33/64)
1/2	12.7	~ 16.6 (41/64 - 21/32)
5/8	15.88	~ 19.7 (49/64 - 25/32)
3/4	19.05	-

Tightening the Flare Nuts

Tightening Torque for Flare Nuts.

Pipe Size (in. O.D.)	Outside Diameter (mm)	Tightening Torque (ft-lbs.)
1/4	6.35	13.0 - 18.0
3/8	9.52	24.6 - 30.4
1/2	12.7	39.8 - 47.7
5/8	15.88	45.4 - 59.3
3/4	19.05	71.5 - 87.5

1. When connecting the flare nuts, coat the flare (outside only) with polyvinyl ether (PVE) refrigeration oil only.

Note:

Do not use polyolyester (POE) or any other type of mineral oil as a thread lubricant. These lubricants are not compatible with the PVE oil used in this system and create oil sludge leading to equipment damage and system malfunction.

Do not add any contaminants inside the refrigerant piping.

2. Initially hand tighten the flare nuts using three (3) or four (4) turns.
3. To finish tightening the flare nuts, use both a torque wrench and a backup wrench.
4. After all the piping has been connected and the caps have been tightened, check for refrigerant gas leaks.

Loosening the Flare Nuts

Always use two (2) wrenches to loosen the flare nuts.

Multi F (Standard or LGRED) Outdoor Unit to Indoor Unit Piping Connections

Note:

Avoid Pipe Damage

- *When routing field-provided piping, avoid damaging the outdoor unit from excessive vibration.*
- *Properly insulate the liquid and gas lines separately up to the point of connection at the unit frame.*
- *See table below for outdoor unit connection types.*

Correctly route the piping so it does not make contact with mounting bolts. Allow room for field installation.

Figure 22: Outdoor Unit (24K) Refrigerant Pipe Connections.

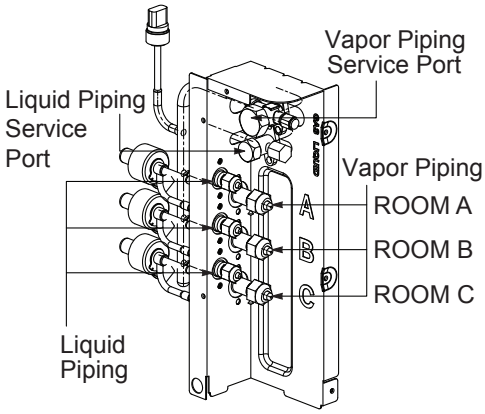

Table 9: Multi F (Standard or LGRED) Outdoor Unit Piping Connections.

Outdoor Unit Piping Connections	LMU183HV LMU180HHV	LMU243HV LMU240HHV	LMU303HV LMU363HV LMU300HHV
Liquid Line Connection (in., OD) x Qty.	Ø1/4 x 2	Ø1/4 x 3	Ø1/4 x 4
Vapor Line Connection (in., OD) x Qty.	Ø3/8 x 2	Ø3/8 x 3	Ø3/8 x 4

Table 10: Indoor Unit Pipe Sizes.

Indoor Unit Capacity	Vapor Line Piping Size (in., OD)	Liquid Line Piping Size (in., OD)
7,000 Btu/h	Ø3/8	Ø1/4
9,000 Btu/h		
12,000 Btu/h		
15,000 Btu/h		
15,000 Bth: Console; 18,000 Btu/h	Ø1/2	
24,000 Btu/h		

Table 12: Indoor Unit Piping Connections.

Indoor Unit Capacity	Vapor Line Conn. (in., OD)	Liquid Line Conn. (in., OD)
7,000 Btu/h	Ø3/8	Ø1/4
9,000 Btu/h		
12,000 Btu/h		
15,000 Btu/h		
15,000 Btu/h Console; 18,000 Btu/h Ducted and Four-Way Cassette	Ø1/2	Ø1/4
24,000 Btu/h Wall Mounted	Ø1/2	Ø1/4
18,000 Btu/h Wall-Mounted; 24,000 Btu/h Ducted; all VAHU	Ø5/8	Ø3/8

Note:

Connection sockets (included as a factory-supplied accessory with the indoor units) will need to be used when piping the indoor units to the outdoor unit. See tables above and below for indoor unit piping connection and connection socket dimensions. See the following page for the connection socket installation procedure.

Table 11: Connection Socket Dimensions.

Indoor Unit Capacity	Vapor (in., OD)		Liquid (in., OD)	
	A	B	A	B
18,000 Btu/h Wall-Mounted and VAHU; 24,000 Btu/h Ducted and VAHU	Ø3/8 → Ø1/2,	Ø1/2 → Ø5/8	Ø1/4 → Ø3/8	
15,000 Btu/h Console; 18,000 Btu/h Ducted and Four-Way Cassette	Ø3/8 → Ø1/2		N/A	
24,000 Btu/h Wall-Mounted	Ø3/8 → Ø1/2		N/A	

Installing Field Piping to the Outdoor Unit Piping Connections

1. Verify the outdoor unit service ports are closed.
2. Remove the caps on the outdoor unit piping connections.
3. Connect the gas piping first to ROOM A, then to ROOM B, then to ROOM C, in that order. Number of connections will differ depending on outdoor unit.
4. Tighten each gas piping connection individually following the “Tightening the Flare Nuts” procedure earlier in this section.
5. Connect the liquid piping first to ROOM A, then to ROOM B, then to ROOM C, in that order. Number of connections will differ depending on outdoor unit.
6. Tighten each liquid piping connection individually following the “Tightening the Flare Nuts” procedure earlier in this section.

Figure 24: Close Up of the Field Piping to the Outdoor Unit Piping Connection.

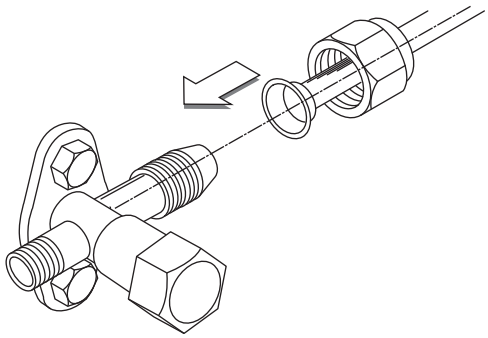

Using the Connection Socket

Some indoor units require the use of a connection socket when piping the indoor units to the outdoor unit. (See previous page for information.) The connection sockets are included as a factory-supplied accessory with the indoor units. To install:

1. Align the center of the piping sections as seen in the diagrams at right and below.
2. Follow the “Tightening the Flare Nuts”procedure earlier in this section.
3. When all piping installation has been completed, perform the triple leak / pressure and evacuation tests (see the Final Installation Procedures Section in the Multi F / Multi F MAX with LGRED Outdoor Unit Installation Manual), verify that the system does not have any leaks, and then fully insulate all joints / connections.

Figure 23: Connection Socket Installation.

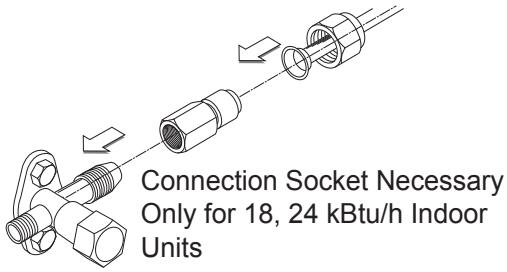

Figure 25: Connection Socket Diagram, External View.

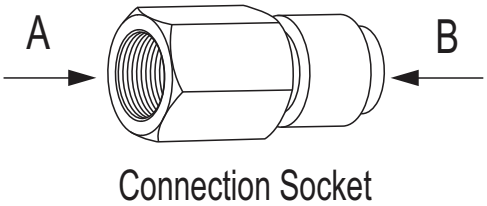

Figure 26: Connection Socket Diagram, Internal View.

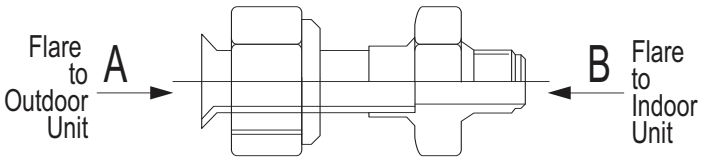

Note:

For connections to regular Multi F and Multi F MAX outdoor unit systems, see the Multi F / Multi F MAX Installation Manual.

Multi F MAX (Standard or LGRED) Outdoor Unit System Piping Connections

Note:

Avoid Pipe Damage

- *When routing field-provided piping, avoid damaging the outdoor unit from excessive vibration.*
- *Properly insulate the liquid and gas lines separately up to the point of connection at the unit frame.*
- *See table below for Multi F MAX (Standard or LGRED) outdoor unit connection types.*

Correctly route the piping so it does not make contact with mounting bolts. Allow room for field installation.

Figure 27: Multi F MAX Outdoor Unit Refrigerant Pipe Connections.

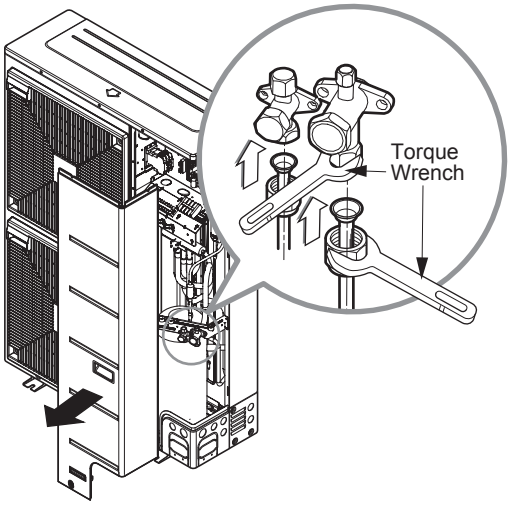

Table 13: Multi F MAX (Standard or LGRED) Outdoor Unit Piping Connections.

Outdoor Unit Piping Connections	LMU483HV, LMU543HV, LMU601HV LMU360HHV, LMU420HHV, LMU480HHV
Liquid Line Connection (in., OD) x Qty.	Ø3/8 x 1
Vapor Line Connection (in., OD) x Qty.	Ø3/4 x 1

Branch Distribution to Indoor Unit Piping Connections

- Install indoor unit liquid and vapor refrigerant pipes (and connection wiring) to the appropriate branch distribution ports.
- Clearly note on the indoor unit's refrigerant piping (liquid, vapor) which branch distribution port it is connected to (A, B, C, D).

Table 14: Branch Distribution Unit Piping Connections.

Branch Distribution Unit	Refrigerant Connections Pipe Size (in.)		Connectable Indoor Unit Capacity (Btu/h)
	Liquid	Vapor	
PMBD3620	Ø1/4 x 2	Ø3/8 x 2	7,000, 9,000, 12,000, 15,000, 18,000, 24,000
PMBD3630	Ø1/4 x 3	Ø3/8 x 3	7,000, 9,000, 12,000, 15,000, 18,000, 24,000
PMBD3640	Ø1/4 x 4	Ø3/8 x 4	7,000, 9,000, 12,000, 15,000, 18,000, 24,000
PMBD3641	Ø1/4 x 4	Ø3/8 x 3	7,000, 9,000, 12,000, 15,000, 18,000, 24,000 (A, B, C)
		Ø1/2 x 1	24,000*, 36,000 (D)

**24,000 Btu/h only applicable to Vertical Air-Handling Unit. 24,000 Btu/h Wall Mounted and 24,000 Ducted cannot be connected to Port D.*

Figure 29: Branch Distribution Piping Connections.

(Branch Distribution Unit: PMBD3640)

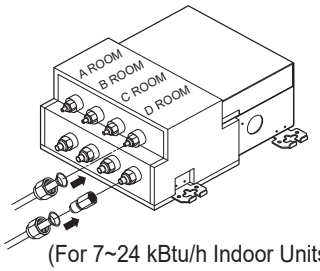

(For 7~24 kBtu/h Indoor Units)

(Branch Distribution Unit: PMBD3641)

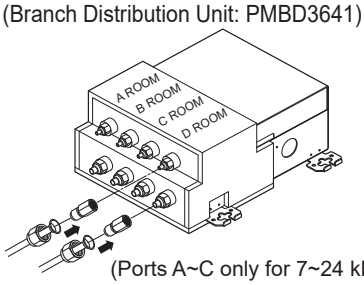

(Ports A~C only for 7~24 kBtu/h Indoor Units;
(Port D only for 36 kBtu/h Indoor Units and 24 kBtu/h Vertical Air-Handling Indoor Units. N/A for 24 KBtu/h Wall-Mounted and Ducted Indoor Units)

Figure 28: Branch Distribution Ports to Indoor Units -- Side View.

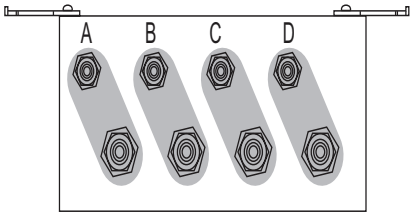

Table 15: Indoor Unit Pipe Sizes.

Indoor Unit Capacity	Vapor Line Piping Size (in., OD)	Liquid Line Piping Size (in., OD)
7,000 Btu/h	Ø3/8	Ø1/4
9,000 Btu/h		
12,000 Btu/h		
15,000 Btu/h		
15,000 Btu/h: Console; 18,000 Btu/h	Ø1/2	
24,000 Btu/h		
36,000 Btu/h	Ø5/8	Ø3/8

Note:

Connection sockets (included as a factory-supplied accessory with the indoor units) will need to be used when piping the indoor units to the branch distribution unit. The connection sockets for 36k indoor units are factory supplied with the branch distribution units. See tables above and below for indoor unit piping connection and connection socket dimensions. See the following page for the connection socket installation procedure.

Table 16: Indoor Unit Piping Connections.

Indoor Unit Capacity	Vapor Line Conn. (in., OD)	Liquid Line Conn. (in., OD)
7,000 Btu/h	Ø3/8	Ø1/4
9,000 Btu/h		
12,000 Btu/h		
15,000 Btu/h		
15,000 Btu/h Console; 18,000 Btu/h Ducted and Four-Way Cassette	Ø1/2	Ø1/4
24,000 Btu/h Wall Mounted	Ø1/2	Ø1/4
18,000 Btu/h Wall-Mounted, 24,000 Btu/h Ducted, all VAHU	Ø5/8	Ø3/8

Table 17: Connection Socket Dimensions.

Indoor Unit Capacity	Vapor (in., OD)		Liquid (in., OD)	
	A	B	A	B
18,000 Btu/h Wall-Mounted and VAHU; 24,000 Btu/h Ducted and VAHU	Ø3/8 → Ø1/2,	Ø1/2 → Ø5/8	Ø1/4 → Ø3/8	
15,000 Btu/h Console; 18,000 Btu/h Ducted and Four-Way Cassette,	Ø3/8 → Ø1/2		N/A	
24,000 Btu/h Wall-Mounted	Ø3/8 → Ø1/2		N/A	
36,000 Btu/h	Ø1/2 → Ø5/8		Ø1/4 → Ø3/8	

Installing Field Piping to the Branch Distribution Unit Piping Connections

1. Remove any caps, etc., that will be on the branch distribution unit.
2. Tighten each piping connection individually following the “Tightening the Flare Nuts” procedure earlier in this section.
3. When all piping installation has been completed, perform the triple leak / pressure and evacuation tests (see the Final Installation Procedures Section in the Multi F / Multi F MAX or Multi F / Multi F MAX LGRED Outdoor Unit Installation Manual), verify that the system does not have any leaks, and then fully insulate all joints / connections.

Using the Connection Socket

Some indoor units require the use of a connection socket when piping the indoor units to the branch distribution unit. (See previous page and below for information.) The connection sockets are included as a factory-supplied accessory with the indoor units, or in the case of the 36k indoor unit, it is factory supplied with the branch distribution units. To install:

Figure 30: Connection Socket Diagram, External View.

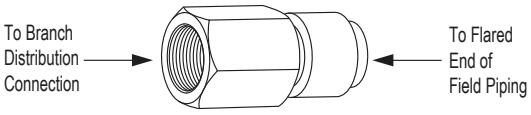

Connection Socket

1. Remove any caps, etc., that will be on the branch distribution unit.
2. Align the center of the piping sections as seen in the diagram at right.
3. Tighten each piping connection individually following the “Tightening the Flare Nuts” procedure earlier in this section.
4. When all piping installation has been completed, perform the triple leak / pressure and evacuation tests (see the Final Installation Procedures Section in the Multi F / Multi F MAX or Multi F / Multi F MAX LGRED Outdoor Unit Installation Manual), verify that the system does not have any leaks, and then fully insulate all joints / connections.

Figure 33: Close Up of Branch Distribution to Indoor Unit Piping Connections.

(Branch Distribution Unit: PMBD3640)

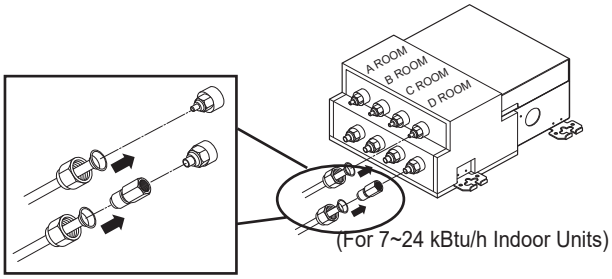

(Branch Distribution Unit: PMBD3641)

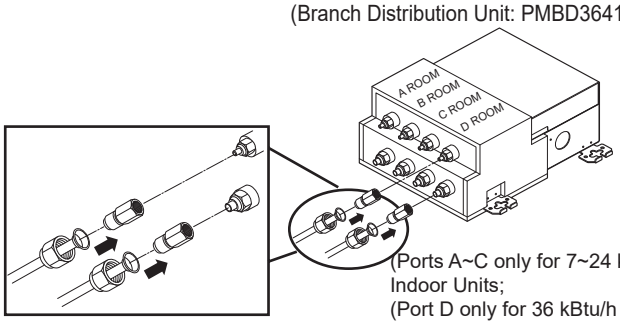

(Ports A~C only for 7~24 kBtu/h Indoor Units;
(Port D only for 36 kBtu/h Indoor Units and 24 kBtu/h Vertical Air-Handling Indoor Units. N/A for 24 KBtu/h Wall-Mounted and Ducted Indoor Units)

Figure 31: Socket Connection.

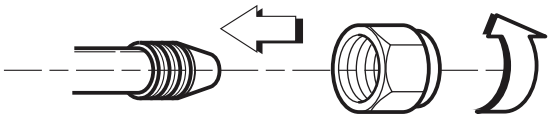

Figure 32: Possible Outdoor Unit or Branch Distribution Unit to Indoor Unit Connections.

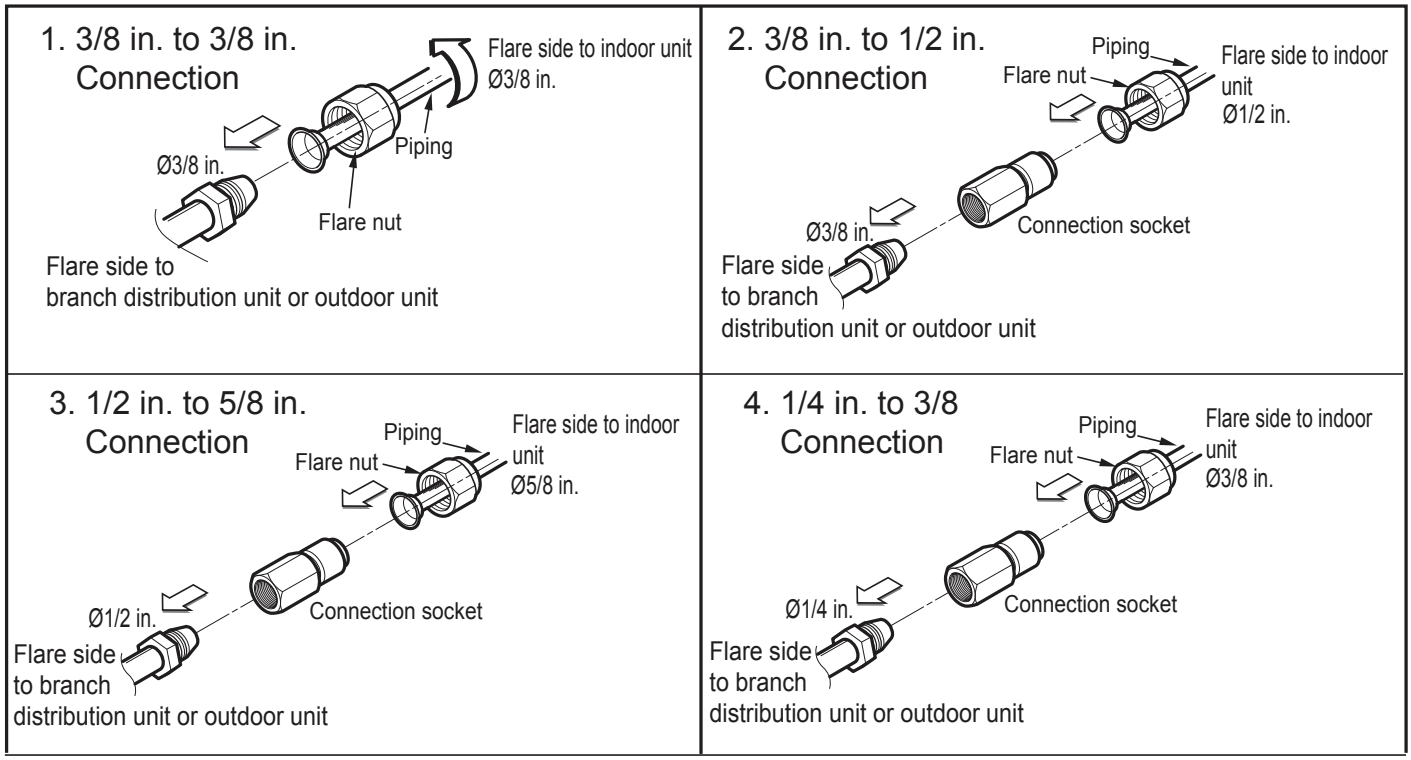

Indoor Unit Drain Piping Installation

- Any holes through the ceilings, walls etc., must be large enough to accommodate the drain piping and insulation. (See the Insulation section for more information. See also local, state, and federal codes.)
- The unit uses a drain pump with a maximum height of up to 27-9/16 inches to remove condensate from the indoor unit to the drainage system. To ensure proper drainage, the flexible drain piping and any field-supplied drain piping must be installed below the maximum height.
- Install any drain lift piping at a right angle to the indoor unit, and no more than 11-13/16 inches (300mm) from the unit.
- Field-supplied drain piping must have downward gradient of at least 1/50 to 1/100. To prevent reverse flow, ⃠ do not vertically slope the drain piping.
- Route the flexible drain pipe to the indoor unit, connect the flexible drain pipe to the indoor unit drain port, and then connect the flexible drain pipe to the field-supplied drain piping.
- When connecting the flexible drain hose or field-supplied drain piping, ⃠ do not damage the drain port on the indoor unit.

Figure 34: Drain Piping Installation Specifications.

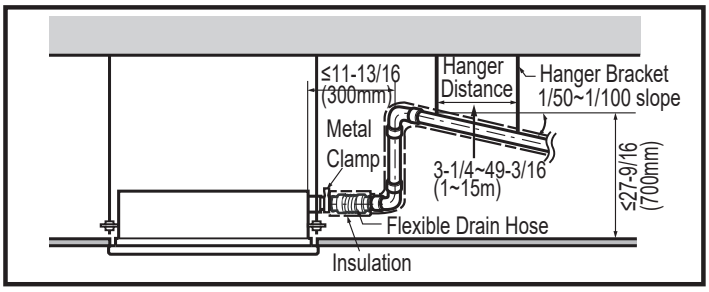

Figure 35: ⃠ Do Not Route the Piping Upward.

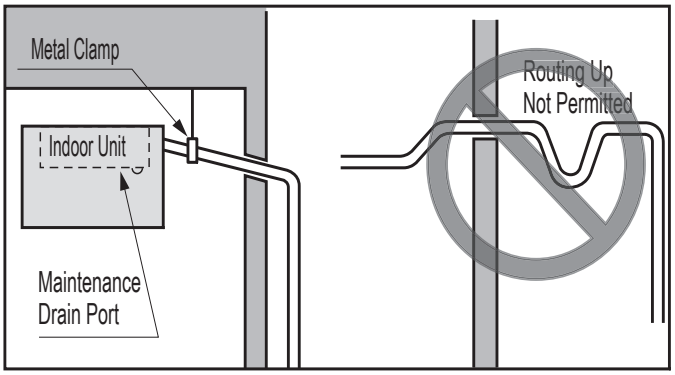

- Dimensions on the indoor unit drain connection is 1-1/4 inches (32mm) outside diameter.
- Piping material: polyvinyl chloride VP25 pipe and pipe fittings.
- After drain hose is installed and tested, insulate with polyethylene foam more than 0.3 inches (8mm) thick (check local, state, and federal codes). Position snugly against the indoor unit frame.

⚠ NOTE

⃠ *Do NOT install the supplied flexible drain hose with a sharp curve or twist. A curved or twisted flexible hose will become damaged due to vibration and / or leak.*

Note:

Condensate can be drained either directly outside or to a common drain system. For more information regarding the common drain system, see the Multi F / Multi F MAX with LGRED Outdoor Unit Engineering Manual or the regular Multi F / Multi F MAX Outdoor Unit Engineering Manual.

If the field drain piping and / or the common drain system is long, install clamp hangers for support.

Table 18: Required Drain Piping Support Intervals.

Piping Dia. (Inch)	Ø3/4" ~ 1-1/2"	Ø1-1/2" ~ 2"	Ø2-1/2" ~ 5"
Maximum Interval (feet)	<3.3	<3.9	<4.9

Checking the Indoor Unit and Drain Piping for Leaks

To test the flexible drain hose and field-supplied drain piping:

- Connect the flexible drain hose to the field-supplied drain piping (that drains to the outside).
- Pour water into the flexible drain hose and check for leaks.
- Repair any leaks if necessary.

To test the evaporator:

- Remove air filter, if present.
- Connect the flexible drain hose to the indoor unit drain port.
- Spray one (1) or two (2) glasses of water on the evaporator. Verify the water flows out of the drain hose without leaks.
- Repair any leaks if necessary.
- After power wiring installation is complete, operate the drain pump to see if it sounds and functions properly.

Figure 36: Checking the Drain Piping.

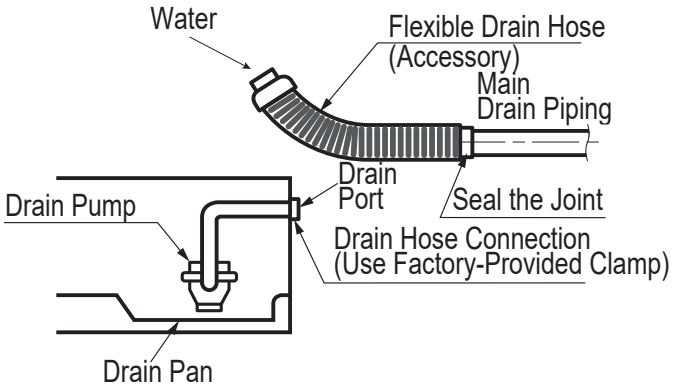

Refrigerant Piping System Insulation

Note:

For information regarding insulation for underground or penetration situations, see the "General Refrigerant Piping System Information" section.

All refrigerant piping from the outdoor unit to the indoor units / branch distribution units (Multi F MAX only) must be insulated correctly for safety and usage. Refrigerant piping, Y-branch connections, field-provided isolation ball valves (if present), service valves, and elbows must be properly and completely insulated using closed cell pipe insulation (up to the indoor unit piping connections). To prevent heat loss / heat gain through the refrigerant piping, all refrigerant piping including liquid lines and vapor lines must be insulated separately. Insulation must be a minimum 1/2 inches thick, and thickness will need to be increased based on ambient conditions and local codes. Table below lists minimum wall thickness requirements for Ethylene Propylene Diene Methylene (EPDM) insulation.

Inside the outdoor unit, maximum pipe temperature is 248°F and minimum pipe temperature is -40°F. For field insulation of refrigerant piping between outdoor units and indoor units, consider the following pipe temperature ranges for an operating heat pump system:

- Heating mode refrigerant temperature ranges: Liquid = 75-118°F; High Pressure Vapor = 95-220°F
- Cooling mode refrigerant temperature ranges: Liquid = 75-118°F; Low Pressure Vapor = 40-90°F

All insulation joints must be glued with no air gaps. Insulation material must fit snugly against the refrigeration pipe with no air space between it and the pipe. ⃠ Do not allow insulation passing through pipe hangers, inside conduit, and/or sleeves to be compressed. Protect insulation inside hangers and supports with a second layer. All pipe insulation exposed to the sun and outdoor elements must be properly protected with PVC, aluminum vapor barrier, or alternatively placed in a weather-resistant enclosure such as a pipe rack with a top cover; and meet local codes.

Figure 37: Typical Insulation Butt-Joint at Indoor Unit Casing.

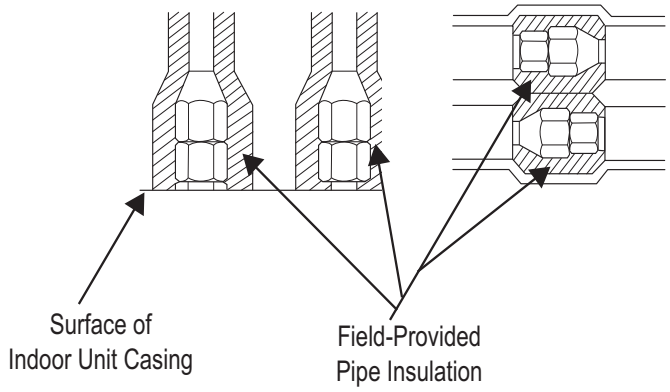

Figure 38: Typical Refrigerant Flare Fitting Insulation Detail.

Figure 39: Close Up of Typical Insulation at the Indoor Unit.

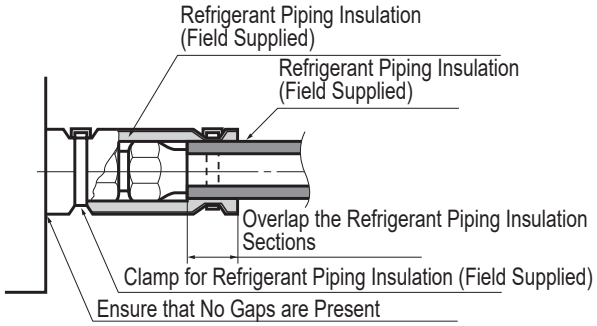

Figure 40: Insulating the Shut Off / Insulation Ball Valve (If Present).

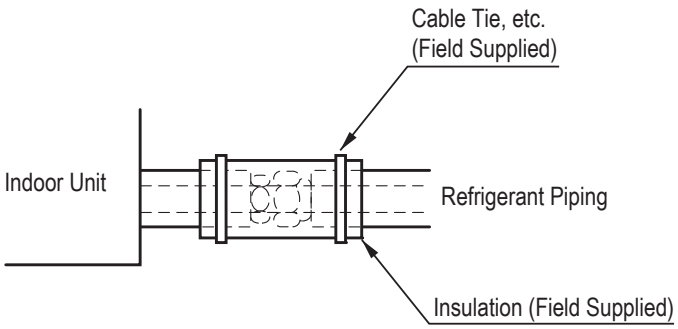

⚠ NOTE

Always include plenty of insulation on all refrigerant and drain piping to ensure condensate does not form and cause damage to walls, floors, etc.

Minimum Refrigerant Pipe Ethylene Propylene Diene Methylene (EPDM) Insulation Wall Thickness Requirements

Note:

- *⃠ Do not insulate gas and liquid pipes together as this can result in pipe leakage and malfunction due to extreme temperature fluctuations.*
- *Always properly insulate the piping. Insufficient insulation will result in condensation, reduced heating/cooling performance, etc. Also, if the pipes aren't insulated properly, condensation could potentially cause damage to building finishes. Pay special attention to insulating the pipes installed in the ceiling plenum.*
- *Fully insulate the piping connections.*
- *Follow local codes and the designer's instructions when selecting ethylene propylene diene methylene (EPDM) insulation wall thickness.*

Table 19: Insulation Guidelines for Typical and Special Circumstances.

<table>
<tr><th colspan="2" rowspan="2">Classification / Piping O.D.</th><th colspan="2">Air-conditioned location</th><th colspan="2">Non-air conditioned location</th></tr>
<tr><th>1. Typical Conditioned Location</th><th>2. Special Conditioned Location</th><th>3. Typical Unconditioned Location</th><th>4. Special Unconditioned Location</th></tr>
<tr><td rowspan="3">Liquid pipe</td><td>ø1/4 inch</td><td rowspan="2">>1/2 inches</td><td rowspan="2">>1/2 inches</td><td rowspan="2">>1/2 inches</td><td rowspan="2">>1/2 inches</td></tr>
<tr><td>ø3/8 inch</td></tr>
<tr><td>≥ø1/2 inch</td><td>>1/2 inches</td><td>>1/2 inches</td><td>>1/2 inches</td><td>>1/2 inches</td></tr>
<tr><td rowspan="12">Vapor pipe</td><td>ø3/8 inch</td><td rowspan="6">>1/2 inches</td><td rowspan="8">>3/4 inches</td><td rowspan="8">>3/4 inches</td><td rowspan="12">>1 inch</td></tr>
<tr><td>ø1/2 inch</td></tr>
<tr><td>ø5/8 inch</td></tr>
<tr><td>ø3/4 inch</td></tr>
<tr><td>ø7/8 inch</td></tr>
<tr><td>ø1 inch</td></tr>
<tr><td>ø1-1/8 inches</td><td rowspan="6">>3/4 inches</td></tr>
<tr><td>ø1-1/4 inches</td><td rowspan="5">>1 inch</td><td rowspan="5">>1 inch</td></tr>
<tr><td>ø1-3/8 inches</td></tr>
<tr><td>ø1-1/2 inches</td></tr>
<tr><td>ø1-3/4 inches</td></tr>
</table>

[1]The thickness of the above insulation material is based on heat conductivity of 0.61 Btu/in/h/ft²/°F.

1. Typical Air-Conditioned Location

A building plenum or space that contains conditioned air that does not exceed 80°F DB. When piping passes through an indoor area where the indoor unit operates, such as an apartment, classroom, office, mall, hospital, etc.

2. Special Air-Conditioned Location

1. When the location is air conditioned, but there is severe temperature/humidity difference due to high ceilings.

- Church, auditorium, theater, lobby, etc.

2. When the location is air conditioned, but internal temperature/humidity are high.

- Bathroom, swimming pool, locker room, etc.

3. Typical Unconditioned Location

When piping passes through an indoor area where the indoor unit does not operate, such as a hallway, dormitory, or school, etc. An unconditioned space inside a building.

4. Special Unconditioned Location: If conditions 1 and 2 below are present.

1. An unconditioned space or plenum of a building.
2. An area where there is an elevated humidity level.

5. Additional Insulation for Indoor Units Will be Required in Humid Environments.

The air conditioner factory insulation has been tested according to "ISO Conditions with Mist," and it satisfies the requirements. If the system has been operating for a long time in a high humidity environment (dew point temperature: more than 73°F), condensate is likely to form. If this happens, install 3/8 inch thick EPDM insulation that is plenum-rated with a heat-resistance factor of more than 248°F.

WIRING

General Guidelines

⚠ WARNING

- *All power wiring and communication cable installation must be performed by authorized service providers working in accordance with local, state, and National Electrical Code (NEC) federal regulations related to electrical equipment and wiring, and following the manufacturer product diagrams, requirements, and instructions in this manual. Failure to do so will lead to electric shock which can cause physical injury or death.*
- *Verify that main power to the unit is completely off before proceeding. Follow all safety and warning information outlined at the beginning of this manual. Failure to do so will cause electric shock and bodily injury or death.*
- *Install a main shutoff switch or circuit breaker that interrupts all power sources simultaneously (circuit breaker must be resistant to electromagnetic currents). Be sure that the circuit breaker or some other emergency power cutoff device is in place before any power wiring is done to the system. Failure to do so will cause bodily injury or death.*
- ⃠ *Never touch any power lines or live cables before all power is cutoff to the system. To do so, will cause bodily injury or death.*
- *Power wiring and communication cable sizes must comply with all applicable federal, state, and local codes. Undersized wiring will lead to unacceptable voltage at the unit and will cause a fire, which will cause bodily injury or death.*
- *Properly ground the outdoor, indoor, and branch distribution units (Multi F MAX Standard or LGRED systems only). Ground wiring is required to prevent accidental electrical shock during current leakage.*
- *Verify that the circuit breaker is set to OFF before installing the wiring system. Electric shock can cause physical injury or death.*
- *Install appropriately sized breakers / fuses / overcurrent protection switches and wiring in accordance with local, state, and NEC regulations related to electrical equipment and wiring, and following the instructions in this manual. Using an oversized breaker or fuse will result in fire, electric shock, physical injury or death.*
- ⃠ *Do not connect ground wire to refrigerant, gas, or water piping; to lightning rods; to telephone ground wiring; or to the building plumbing system. Failure to properly provide a NEC-approved earth ground can result in electric shock, fire, physical injury or death.*

⚠ NOTE

- *Consider ambient conditions (temperature, direct sunlight, inclement weather, etc.) when selecting, installing, and connecting the power wiring.*
- *Properly ground the outdoor, indoor, and branch distribution units (Multi F MAX Standard or LGRED systems only). Improperly connected ground wire can cause communication problems from electrical noise and motor current leakage. Ground wiring must always be installed by a qualified technician.*
- *Install appropriately sized breakers / fuses / overcurrent protection switches and wiring in accordance with local, state, and NEC regulations related to electrical equipment and wiring, and following the instructions in this manual. Generated overcurrent will include some amount of direct current. Using an oversized breaker or fuse will result in equipment malfunction and property damage.*
- ⃠ *Do not connect ground wire to refrigerant, gas, or water piping; to lightning rods; to telephone ground wiring; or to the building plumbing system. Failure to properly provide a NEC-approved earth ground can result in property damage and equipment malfunction.*
- ⃠ *Do not operate the air conditioning system until the refrigerant piping installation is complete. Operating the system before refrigerant piping is finalized will damage the compressor.*

Power Wiring / Communication Cable Connections

Best practice dictates using solderless ring or fork terminals at all power wiring and communication cable terminations. Use copper bearing ring or fork terminals; ⃠ do not use galvanized or nickel plate over steel. Use appropriate crimping tool to attach the ring or fork terminals at all power wiring and control cable terminations.

Figure 42: Close up of a Typical Ring Terminal.

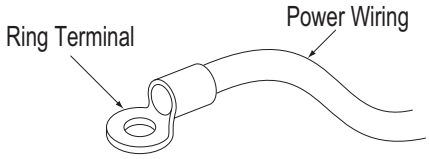

To Install a Ring or Fork Terminal:

1. Trim the wiring with wire cutters or pliers, then strip the insulation to expose the strand wiring to about 3/8 inches.
2. Using a ring terminal fastener or pliers, securely clamp a ring terminal to each stripped wire end.

Figure 43: Adding a Ring Terminal to the Wiring.

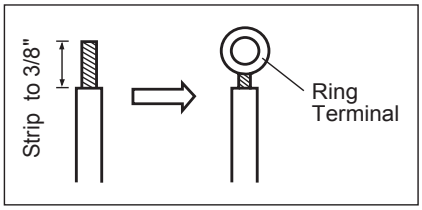

To Connect the Wiring to the Terminals:

1. Remove the JIS terminal screws from the (outdoor unit, branch distribution unit, or indoor unit) terminal plate with a JIS screwdriver. (See information about LG terminal connections on the next page.)
2. Position the ring terminal around the terminal, place the terminal screw in the ring, and tighten to the terminal plate using a JIS screwdriver.
   - Firmly attach the wire; secure in a way to prevent external forces from being imparted to the terminal block.
   - Use an appropriately sized JIS screwdriver for tightening the terminals.
   - ⃠ Do not over tighten the connections; over tightening will damage the terminals.

Figure 41: Tightening the Ring Terminal to the Terminal Plate.

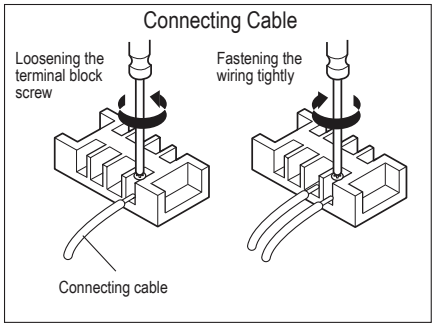

If ring terminals or fork terminals are not available, then:

- ⃠ Do not terminate different gauge wires to the power terminal block. (Slack in the wiring will generate heat.)
- When terminating wires of the same thickness, follow the instructions demonstrated in the figures below.

● :Copper Wire

Figure 44: Proper and Improper Power Wiring Connections.

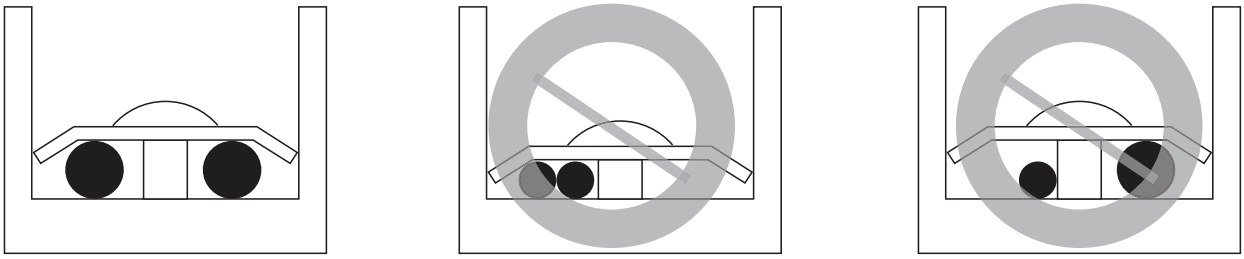

Terminate multiple power wires of the same gauge to both sides.

Do not terminate two wires on one side.

Do not terminate different gauge wires to a terminal block.

⚠ WARNING

If power wires are not properly terminated and firmly attached, there is risk of fire, electric shock, and physical injury or death.

⚠ NOTE

- ⃠ *Never apply line voltage power to the communications cable terminal block. If contact is made, the PCBs will be damaged.*
- *Always include some allowance in the wiring length when terminating. Firmly attach the wiring or cable, but provide some slack to facilitate removing the electrical panels while servicing, and to prevent external forces from damaging the terminal block.*
- ⃠ *Never ground the shield of the communications cable to the indoor unit frame or other grounded entities of the building. Ground the communications cable shield only at the outdoor unit. Improperly grounding this cable can cause communications errors.*

LG Terminal Connections

LG uses a "JIS" type of screw for all terminals; use a JIS screwdriver to tighten and loosen these screws and avoid damaging the terminal. ⃠ Do not over tighten the connections — over tightening will damage the terminals — but firmly and securely attach the wiring in a way to prevent external forces from being imparted to the terminal block.

Figure 45: JIS Screws.

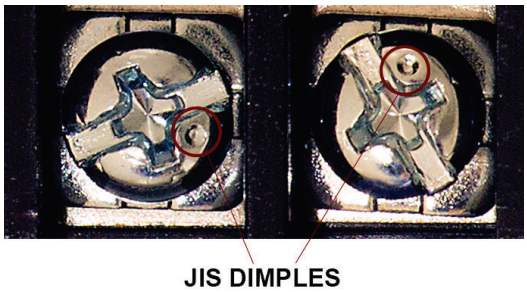

Note:

- *The terminals labeled "GND" are NOT ground terminals. The terminals labeled ⏚ ARE ground terminals.*
- *Polarity matters. Always connect "A" to "A" and "B" to "B."*
- *Always create a wiring diagram that contains the exact sequence in which all the indoor units and branch distribution units (Multi F MAX systems Standard or LGRED only) are wired in relation to the outdoor unit.*
- ⃠ *Do not include splices or wire nuts in the communication cable.*

Power Supply / Power Wiring Specifications

- Multi F and Multi F MAX (Standard or LGRED) systems operate at 1Ø, 208-230V, 60Hz, and power is wired to the outdoor unit only. The outdoor unit will supply power to the indoor units and the branch distribution units (Multi F MAX [Standard or LGRED] systems only) through the communication / connection (power) cable (indoor units and branch distribution units draw minimum power). See the Multi F / Multi F MAX Outdoor Unit Installation Manual or the Multi F / Multi F MAX with LGRED for information.
- Select power supply wire type and size based on NEC and local codes. Maximum voltage fluctuation ±10% of the nameplate rated value.
- Properly ground the outdoor unit / indoor units / branch distribution units per NEC and local codes.
- Ground wire must be longer than the common power / communication wires.
- Connect the wiring firmly so the wires cannot be easily pulled out.
- Refer to the inside of the chassis cover or control cover for circuit and terminal block diagrams.
- Always match color codes of each wire and follow wiring diagram.
- ⃠ Do not install power wiring to the outdoor unit and the communication / connection (power) cable to the indoor unit in the same conduit. Use separate conduits.

Figure 46: Power Wiring Conduit.

⚠ WARNING

- *Always have a trained service provider properly ground the outdoor unit. If the outdoor unit is not properly grounded, there is a risk of electric shock, physical injury, or death.*
- *Provide a circuit breaker between the power source and the outdoor unit. Failure to do so will cause bodily injury or death.*

Communication / Connection (Power) Cable Specifications

- Insulation material as required by local code.
- Rated for continuous exposure of temperatures up to 140°F.
- Firmly attach the cable; provide slack but secure in a way to prevent external forces from being imparted on the terminal block.
- Wiring must be completed without splices.

Figure 47: Typical Multi F / Multi F MAX (Standard or LGRED) Outdoor and Indoor / Branch Distribution Unit Wiring and Communications Cable Diagram.

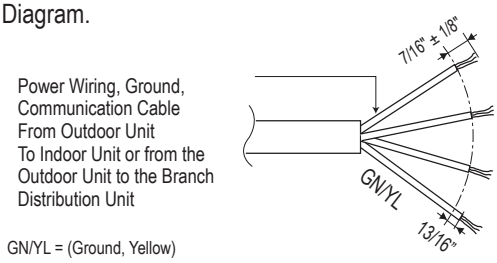

Multi F Systems (Standard or LGRED):

- Communication / connection (power) cable from the outdoor unit to the indoor unit must use a minimum of 14 AWG, four (4) conductor, stranded, shielded or unshielded (if shielded, it must be grounded to the chassis of the outdoor unit only), and must comply with applicable local and national codes.
- Use of 14 AWG, four (4) conductor, stranded, shielded or unshielded wire is allowed for lengths up to the published maximum pipe length, plus recommended slack at both ends.

Multi F MAX Systems (Standard or LGRED):

- All communication / connection (power) cable from the outdoor unit to the branch distribution unit(s) must be a minimum of 14 AWG, four (4) conductor, stranded, shielded or unshielded (if shielded, it must be grounded to the chassis of the outdoor unit only), and must comply with applicable local and national codes.
- Communication / connection (power) cable from the branch distribution unit(s) to the indoor units must use a minimum of 14 AWG, four (4) conductor, stranded, shielded or unshielded (if shielded, it must be grounded to the chassis of the outdoor unit only), and must comply with applicable local and national codes.
- Use of 14 AWG, four (4) conductor, stranded, shielded or unshielded wire is allowed for lengths up to the published maximum pipe length, plus recommended slack at both ends.

Note:

- *Use a conduit for the communications / connection (power) cable from the outdoor unit to the indoor units and branch distribution unit(s). Electrical interference my cause product malfunction.*
- *⃠ Never ground the shield of the communications cable to the indoor unit frame or other grounded entities of the building. Ground the communications cable shield only at the outdoor unit. Improperly grounding this cable can cause communications errors.*
- *The communications / connection (power) cable from the outdoor unit to the indoor units / branch distribution unit(s) must be separated and isolated from power wiring to the outdoor unit, computers, radio and television broadcasting facilities, as well as medical imaging equipment. Electrical interference my cause product malfunction.*

Figure 48: Typical Multi F (Standard or LGRED) System General Power / Communications System Schematic.

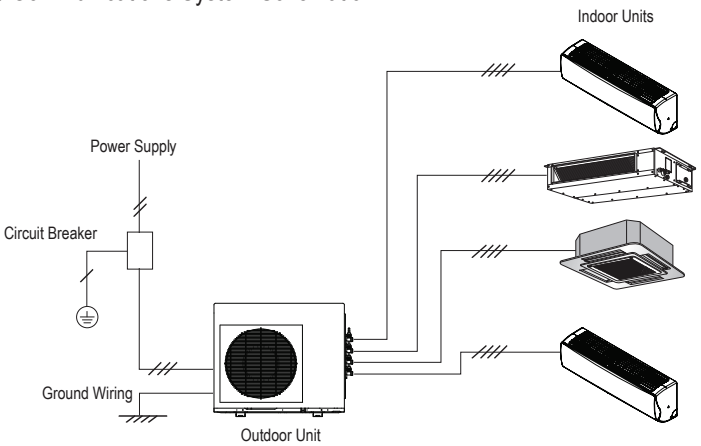

Figure 49: Typical Multi F MAX (Standard or LGRED) System General Power / Communications System Schematic.

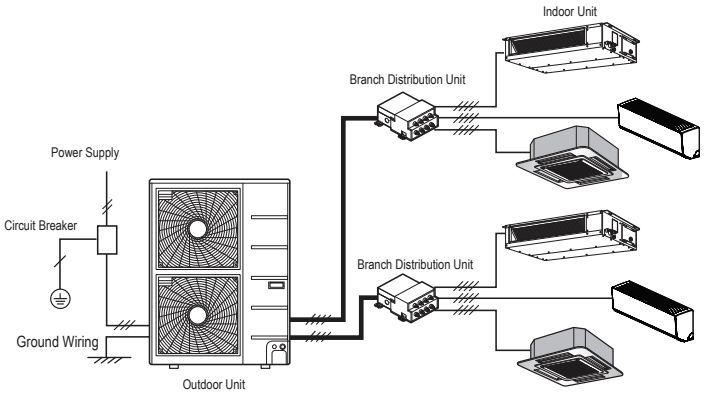

Controller Options

Ceiling cassette indoor units wireless handheld remote controller (Model No. PQWRHQ0FDB[1]), but optional LG-supplied wired controllers are available. After all wiring is connected to the indoor and outdoor units, test the accompanying remote controllers for performance. As always, follow all safety warnings and notes when operating the units using the remote controller. Additionally, all of the Multi F / Multi F MAX (Standard or LGRED) outdoor units can use the following controllers when accompanied with the PI-485 VNet Accessory:

- AC Smart
- ACP
- BACnet®
- LonWorks®

BACnet® is a registered trademark of ASHRAE.
LonWorks® is a registered trademark of Echelon Corporation.

Wireless Handheld Controller

Figure 50: PQWRHQ0FDB Wireless Handheld Controller.

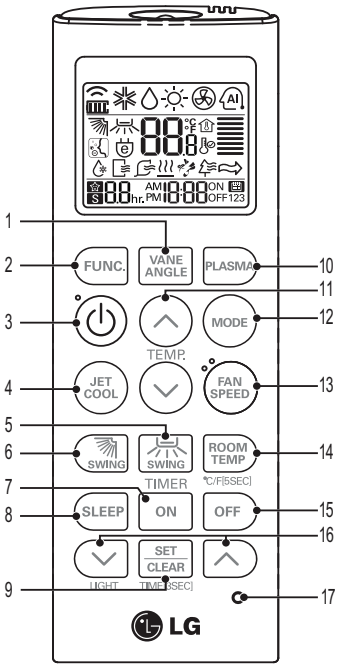

Operation Mode Sequence

Cooling Mode
↓
Auto Mode/Changeover
↓
Dehumidification Mode
↓
Heating Mode
↓
Fan Mode

Table 20: PQWRHQ0FDB[1] Wireless Handheld Controller Functions.[2]

Button Label	Description
1	Vane Angle Button: Sets the angle to each vane.
2	Function Setting Button: Sets or clears auto clean, smart clean, electric heater, or individual vane angle control functions.
3	On / Off Button: Turns the power on/off.
4	Jet Cool: Sets the unit to super high fan speed when in cooling mode.
5	Left / Right Air Flow Button (optional): Sets the desired left / right (horizontal) air flow direction.
6	Up / Down Air flow Button: Stops or starts louver movement, and sets the desired air flow direction to up or down.
7	On Time Button: Sets the time when the operation begins.
8	Sleep Timer Button: Sets the sleep mode operation.
9	Set / Clear Button: Sets or cancels the timer, also sets the current time.
10	Plasma Button: Starts or stops plasma-purification functions.
11	Room Temperature Setting Button: Raises or lowers temperature setpoint in cooling and heating operation.
12	Operation mode selection button: Selects the operation mode.
13	Indoor Fan Speed Button: Changes the fan speed to one of four choices: low, medium, high, and chaos.
14	Room Temperature Check Button: Displays / checks the room temperature.
15	Off Timer button: Sets the time when the operation ends.
16	Time Setting (Up / Down) / Light Button: Sets the timer and adjusts the brightness of the LED.
17	Reset Button: Resets the remote controller.

[1]Wireless Handheld Controller for the four-way ceiling cassette indoor units is also referenced by Model No. AKB73757604.

[2]Depending on the indoor unit model, some functions will not be supported or displayed.

Communication Cables From Indoor Units to Remote Controllers

- Communication cable from indoor unit to remote controller(s) is to be LG supplied or field supplied 22 AWG, 3-conductor, twisted, stranded, unshielded. Wiring must comply with all applicable local and national codes.
- If using the LG supplied cable and the length needs to be extended, the LG Extension Kit (sold separately) must be used. A maximum of four (4) kits (up to 165 feet) can be used.
- Remote controllers have hardwired connections: SIG - 12V - GND (Comm.) terminals.
- Indoor unit controller connections depend on type of indoor unit being installed. Some indoor units use terminal block connections; other indoor units use Molex connections. See diagrams below for the two options. Refer to the wiring diagram schematic found in the indoor unit itself, or to the indoor unit wiring diagrams in the Engineering Manuals for more information.
- ⃠ NEVER splice, cut, or extend LG supplied cable with field provided cable. Always include enough cable to cover distance between the indoor unit and the remote controller.
- Set the indoor unit operating parameters using DIP switches, or by setting up the remote controller. Refer to the indoor unit installation manuals for more details.

Figure 51: One Example of Indoor Unit to Zone Controller Connection.

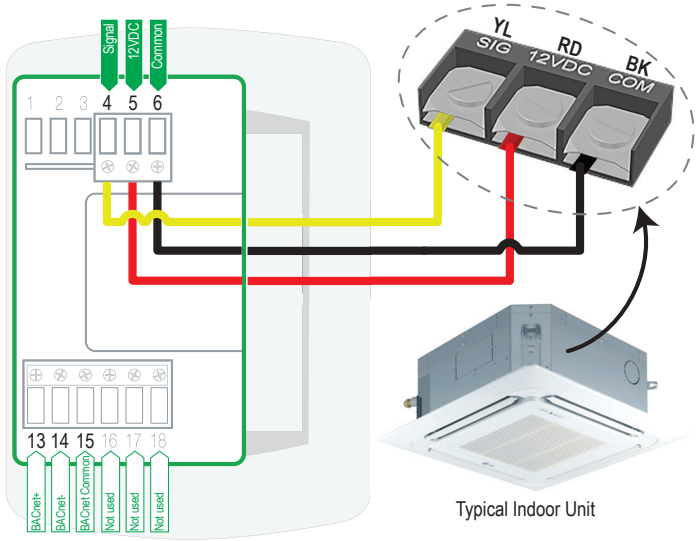

Figure 52: Another Example of Indoor Unit to Zone Controller Connection.

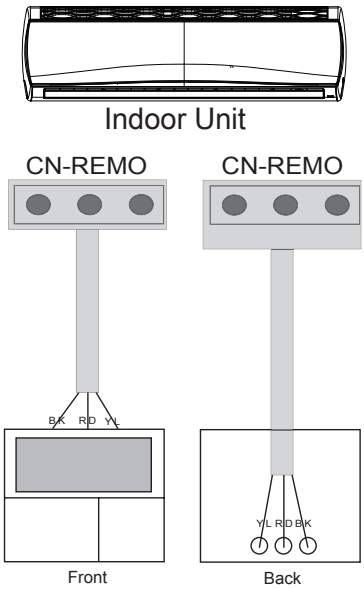

Note:

Cable connected to Zone Controller is the factory default connection.

Communication Cables Between Multiple Indoor Units Operating as a Group (Group Control)

If any indoor units were specified to operate in unison:

- Before running cable, decide which indoor unit will be the "Main." The other indoor units in that group will be designated as "Sub(s)." The zone controller will be connected to the "Main."
- Set the pertinent DIP switch at each indoor unit to identify the Main and Sub(s). On wall mounted indoor unit models, set the assignment using the handheld remote controller.
- Use a daisy chain configuration and connect all of the group's indoor units together starting at the "Main" unit.
- ⃠ NEVER splice, cut, or extend cable length with field provided cable. Always include enough cable to cover distance between all components.

For indoor units with hardwired connections SIG - 12V - GND (Comm.) terminals:

- From the controller to the main indoor unit, use 22 AWG, 3-conductor, twisted, stranded, unshielded. All wiring must comply with all applicable local / national codes.
- From the main indoor unit to the sub indoor unit(s), daisy chain using 22 AWG, 3-conductor, twisted, stranded, unshielded. All wiring must comply with all applicable local / national codes.
- ⃠ Do not attach wire to 12VDC terminal to the sub indoor units. All wiring must comply with all applicable local and national codes.
- ⃠ NEVER splice, cut, or extend cable length; always include enough cable to cover distance between all components.

For indoor units with CN-REMO connections:

Use one (or multiple) Group Control Kit(s) (sold separately) containing extension and Y-splitter cables. Use one (1) group control cable kit for each indoor unit in the group except for the last indoor unit. ⃠ NEVER splice, cut, or extend cable length with field provided cable.

Figure 53: Example of Indoor Unit Group to Zone Controller Connections (Sig-12V-GND [Comm.] Terminal).

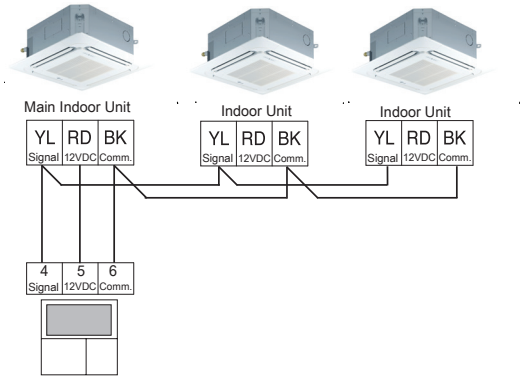

Figure 54: Example of Indoor Unit Group to Zone Controller Connections (CN-REMO).

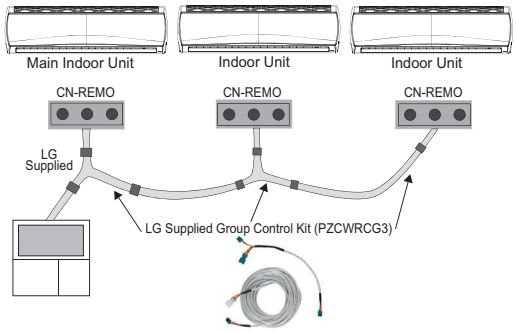

Table 21: Accessories for Some Group Control Applications.

Accessory	Model Number	Image
Wired Remote Group Control Cable Assembly, Required for connecting multiple indoor units to a control group	PZCWRCG3	
Wired Remote/Wired Remote Extension Cable, Required for extending the distance between indoor units or remote controllers in a control group	PZCWRC1	

Note:

- *Cable connected to zone controller is the factory default connection.*
- *Indoor unit connections depend on indoor unit type.*

General Specifications

- Wired remote controllers can be connected to all indoor unit types.
- Wireless controllers can be used in conjunction with wired remote controllers.
- A dry contact unit can be connected with a central controller simultaneously.
  - The main indoor unit is recognized by the dry contact unit and the central controller.
  - Group Control only available for indoor units manufactured after February 2009.
  - The central controller can control indoor units after setting the address of the main indoor unit only.
  - Sub indoor unit cannot be individually controlled by central controller.
  - Sub indoor unit will operate like main indoor unit.
- If an error occurs with the indoor unit, the error will be displayed on the wired remote controller.
- The following functions are available with group control:
- Selection of operation options (operation/mode/set temperature)
- Control of air flow rate (High/Medium/Low)

Connecting the Power Wiring / Communication Cable

The general guidelines for connecting electrical and communication cables are similar for all ceiling cassette indoor units. The electrical connections procedure includes a wiring diagram for the ceiling cassette indoor unit. It is required that power wiring / communications cable installation be performed before decorative grille kit (required; sold separately) installation.

⚠WARNING

- *Verify that main power to the unit is completely off before proceeding with these steps as there is a risk of electrical shock, bodily injury, and / or death.*
- *Follow all safety and warning information outlined at the beginning and throughout this manual. Failure to do so will cause electrical shock, bodily injury, and / or death.*
- *Loose wiring will cause unit malfunction, or the terminal to overheat and catch fire, causing physical injury.*

Note:

- *Follow all safety and warning information outlined at the beginning and throughout this manual. Failure to do so will cause unit failure.*
- *Connect the communication / connection (power) cable to the indoor unit by matching the terminals on the outdoor unit control board. Verify the color of the wires at the outdoor unit, along with the terminal numbers, match those for the indoor unit.*
- *Images are representative; actual appearance will vary.*
- *Refer to the circuit diagram on the indoor unit bottom cover.*
- *Ceiling cassette units require removing the control cover from the terminal block area. Control covers are attached with two (2) Phillips screw head screws.*
- *Terminal screws will become loose during transport. Properly tighten the terminal connections during installation.*

Connecting the Power Wiring and Communications Cable

1. If the decoration grille (required; sold separately) has been installed, remove it for easier access to the control box. For information on decoration grille installation, see the Final Procedures section.

2. To access the terminal block, remove the metal control box cover by unscrewing the two (2) screws that hold it in place. Set aside the control box cover and screws for reattachment.

3. Insert the power wiring / communications cable from the outdoor unit or branch distribution unit (Multi F MAX [Standard or LGRED] systems only) through its designated access holes in the sides of the indoor unit and control box to prevent damage. To prevent electromagnetic interference and product malfunction, leave a space between the power wiring and communications cable outside of the indoor unit. If using a conduit, attach it to the conduit mounting plate at the access hole, and secure with a lock nut.

4. Using a JIS screwdriver, connect each wire to its appropriate terminal on the indoor unit control board. Verify that the color and terminal numbers from the outdoor unit or branch distribution unit (Multi F MAX [Standard or LGRED] systems only) wiring match the color and terminal numbers on the indoor unit. Refer to the wiring diagram on the indoor unit.

5. If installing a wired remote controller (optional, sold separately), insert the controller wiring through its designated access hole opposite of the outdoor to indoor cable. Refer to the wiring diagram on the indoor unit.

Figure 55: Power Wiring and Communications Cable Connection Access.

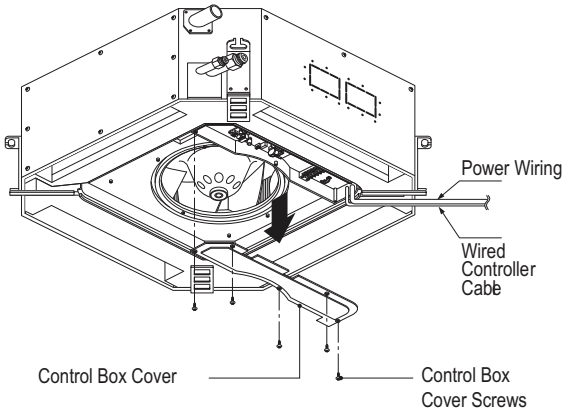

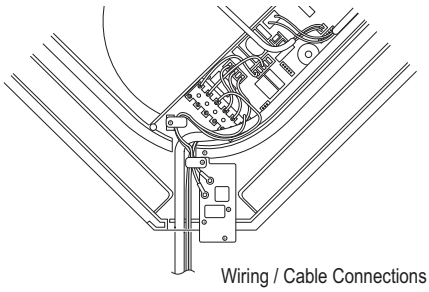

6. Neatly arrange power wiring / communications cable and secure with the appropriate cable restraint. When clamping, ⃠ do not apply force to the wiring connections.

7. Reinstall the metal control box by reattaching it with its two (2) screws; ⃠ do not catch the wiring in the electric box cover and make sure the cover firmly closes.

8. Fill in any gaps around the wiring access holes with sealant to prevent foreign particles from entering the indoor unit.

Note:

• Each wire must be securely attached to the terminal block.
• Secure the cable onto the control board using a cable tie.
• Use a conduit to protect the cable / refrigerant piping from the indoor unit to the outdoor unit.

Note:

For more information on conduits or the bundling method, see the Installation section.

Figure 56: Multi F Four-Way Ceiling-Cassette Indoor Unit Wiring Diagram.

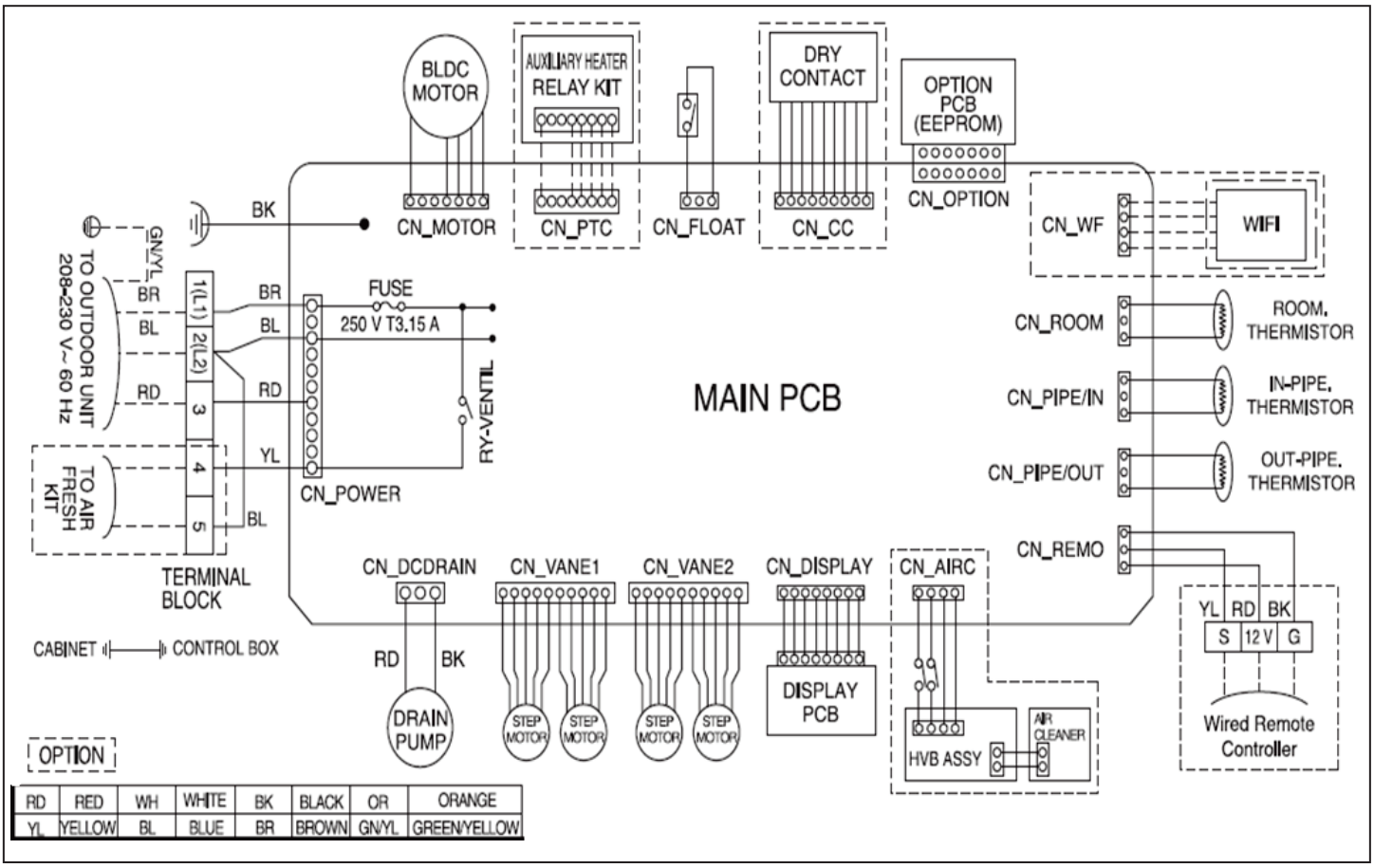

Figure 57: Simplified View of Indoor Unit to Outdoor Unit / Branch Distribution Unit Terminal Connections.

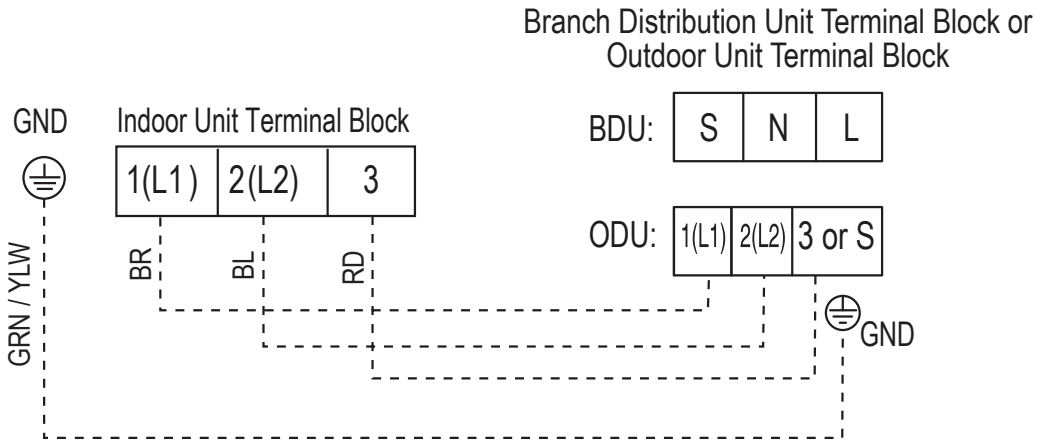

Figure 58: Typical Indoor Unit Terminal Block with Grounding Cable (Actual Appearance Will Vary).

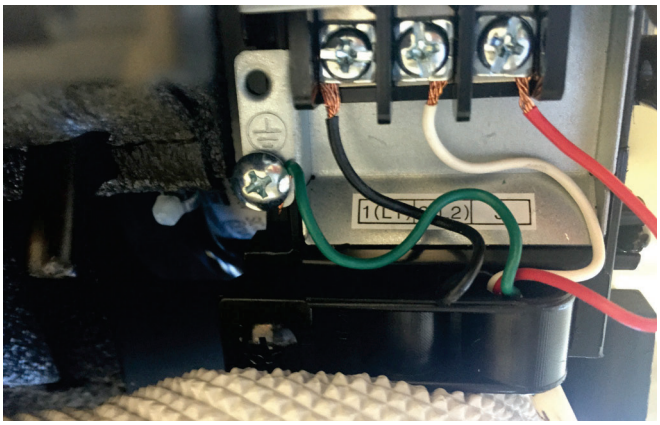

Using a Conduit

1. Remove the rubber stopper on the indoor unit. Pass the power wiring / communications cable through the conduit, the conduit mounting plate, and to / through the control panel of the indoor unit.

2. Tighten the conduit and the conduit mounting plate together.

3. Connect the power wiring / communications cable to the indoor unit terminal block.

4. Screw the conduit mounting plate to the indoor unit.

Figure 59: Using a Conduit.

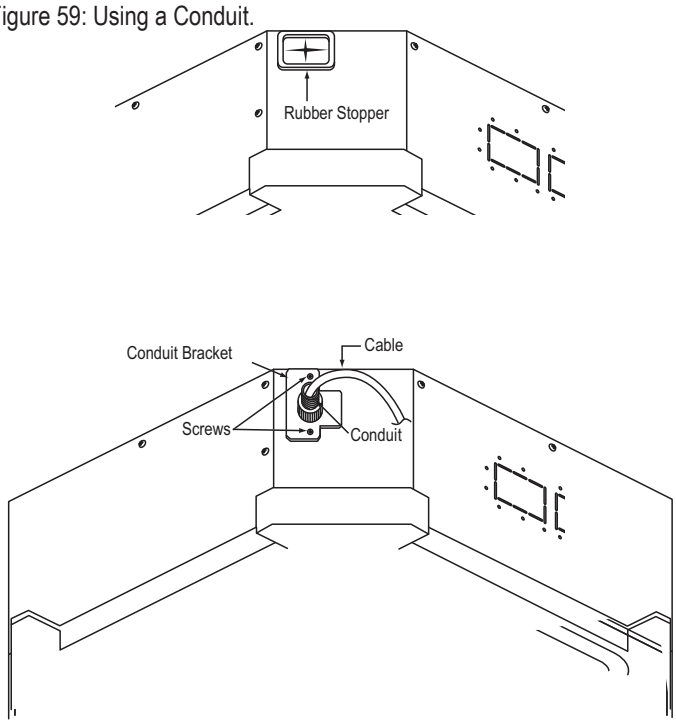

Wired Controller Installation

Ceiling cassette indoor units can be used with various wired controllers (optional; sold separately). Wired controllers include a sensor to detect room temperature. To maintain comfort levels in the conditioned space, the wired controller must be installed in a location away from direct sunlight, high humidity, and where it could be directly exposed to cold air. Controller must be installed four (4) to five (5) feet above the floor where its display can be read easily, in an area with good air circulation, and where it can detect an average room temperature.

Figure 60: Proper Location for the Wired Controller.

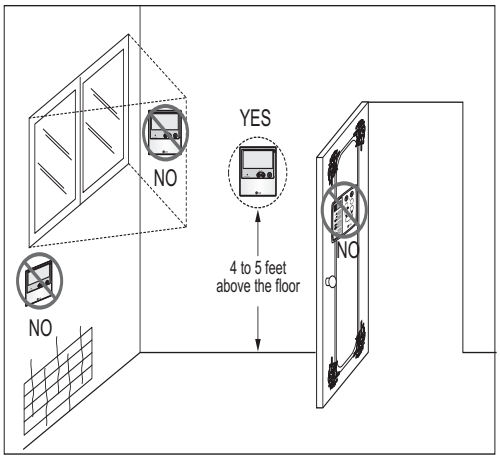

Do not install the remote controller where it can be impacted by the following:
- *Drafts or dead spots behind doors and in corners*
- *Hot or cold air from ducts*
- *Radiant heat from sun or appliances*
- *Concealed pipes and chimneys*
- *Uncontrolled areas such as an outside wall behind the remote controller*

1. Pull communications cable between the controller handy box (if used) and the indoor unit (field supplied).
2. Store a minimal amount of cable in the handy box. Any additional cable must be coiled and stored near the indoor unit control panel.
3. If additional cable length is needed, communication cable from the indoor unit to the remote controller(s) is to be 22 AWG, 3-conductor, twisted, stranded, unshielded. Wiring must comply with all applicable local and national codes. If using the LG Controller / Extension cable and the length needs to be further extended, the LG Extension Kit (sold separately) must be used. A maximum of four (4) kits (up to 165 feet) can be used.
4. If the cable between a zone controller and the indoor unit is too long, do not cut. Coil any spare communications cable, tie-wrap it, and leave it next to the indoor unit location.

Assigning the Thermistor for Temperature Detection

Each indoor unit includes a return air thermistor assigned to sense the temperature. If a wired controller is installed, there is a choice of sensing temperature with either the indoor unit return air thermistor or the thermistor in the wired controller. It is also an option to set both thermistors to sense temperature so that indoor unit bases its operation on the first thermistor to reach the designated temperature differential.

An optional Remote Temperature Sensor can be used in lieu of the return air thermistor—either alone or in conjunction with a wired controller thermistor.

Wall-Mounted Sensor Installation

Proper indoor unit operation depends on the location of the room sensor, if a room sensor is installed in addition to, or to use in place of a controller. A good location will protect the sensor from direct sunlight and external local sources of water vapor, and air flow. If no mounting height was specified by the building designer, place the handy box approximately four (4) to five (5) feet above the finished floor.

- It could be necessary to use a handy box that is sized in metric units, depending on the sensor model. Check with your LG representative to verify which size of handy box is needed for the sensor in question.
- Communication cable from the indoor unit to the controller(s) is to be 22 AWG, 3-conductor, twisted, stranded, unshielded. Wiring must comply with all applicable local and national codes. If using the LG Controller / Extension cable and the length needs to be further extended, the LG Extension Kit (sold separately) must be used. A maximum of four (4) kits (up to 165 feet) can be used.
- Maintain at least the minimum distance required between the communications cable and power wiring. The minimum required space between the two depends on the voltage of the power wiring.

Note:

- *Do not route power wiring and communications cables in the same conduit. Routing power wiring and communications cables together will cause communication errors and unit malfunction.*
- *Do not cut the quick-connect plugs off or adjust the length of the cable. Keep the communications cable away from high voltage wires and electromagnetic field (EMF) producing equipment. Performing these actions will cause communication errors and unit malfunction.*

Four-Way Panel Installation, General

Note:

- *Panel is an accessory that is sold separately.*
- *Before installing the panel, always remove the paper template first.*
- *For more details, see the installation instructions that are shipped with the panel.*

1. Install the two screws (M5) on the cassette frame (factory supplied). Tighten only about 3/8 inch.
2. Remove the air inlet grille from the panel. (Remove the hook for the air inlet grille cord.)
3. Hook the panel key hole on the installed screws, and slide the panel so that the screws lock into the key hole edge.
4. Tighten completely the two initially installed screws, and install the two additional screws.
5. Connect the louver motor connector and display connector.
6. After tightening these screws, install the air inlet grille (including the air filter).

Figure 61: Four-Way Cassette Panel Installation.

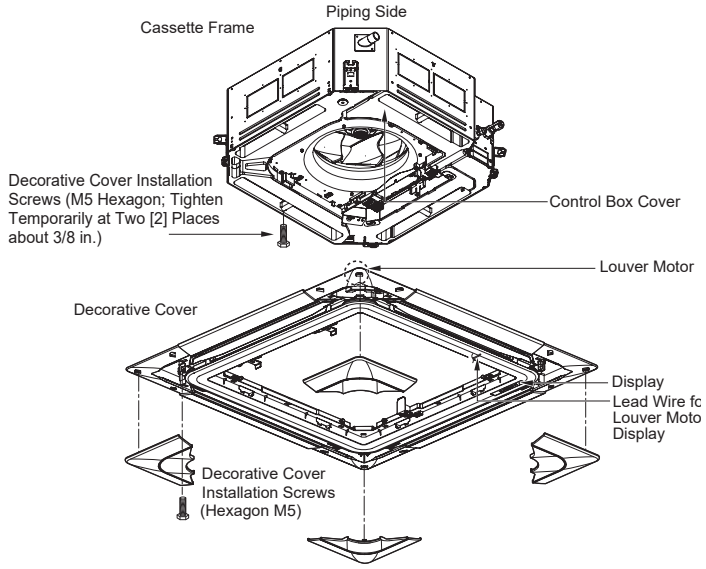

Figure 62: Swing Inlet Grille Downward on the Four-Way Cassette Indoor Unit Frame.

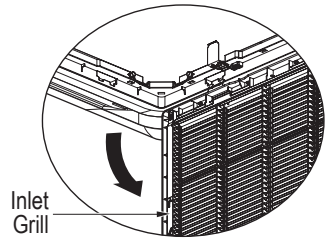

Figure 63: Properly Installing Panel Against the Four-Way Cassette Indoor Unit Frame.

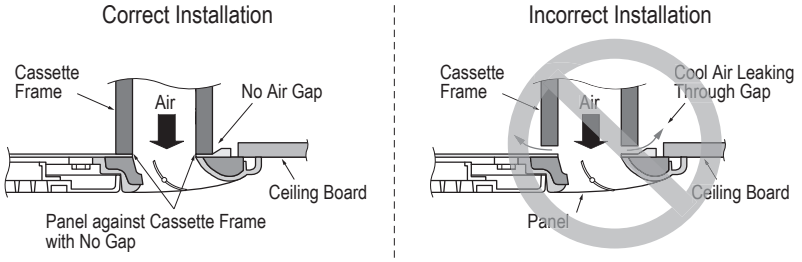

⚠NOTE

Install the panel snugly and without gaps. Any gaps between the ceiling and the cassette frame will release cool air, which will cause sweating. Water drops that fall will damage the surrounding ceiling, floor, and walls.

Note:

There are two types of installation methods; refer to the instructions that match the specific panel ordered.

Installing the Panel, Method 1

⚠NOTE

Panel (sold separately) must be installed properly; cool air will leak from any gaps found between the indoor unit frame and the panel, condensation will generate, and cause product and property damage.

1. Remove the packaging and paper template, take out air inlet grille from the panel, separating the link from the grille (1A) and then remove the corner covers of the panel (1B).

2. Attach the panel to the indoor frame by inserting the hooks as shown (2).

3. Insert two screws on diagonal corners of each panel, but ⃠ do not tighten completely (3) (the screws can be found in the indoor unit shipping box). The screws to attach the panel to the indoor unit frame are factory-provided and can be found in the shipping box. Verify the panel is aligned with the ceiling. Adjust the height by using the hanging bolts as shown. Insert the other two screws, and then tighten all four screws until panel is secure.

4. Attach the corner covers (4).

5. Unscrew the two screws holding the control panel cover (5) and remove (if not removed already). Set aside the control panel cover for re-installation.

6. Connect the one display connector (CN-DISPLAY) and the two vane control connectors (CN-VANE1, CN-VANE2) of the front panel to the indoor unit PCB (6). Reattach the cover of the control box (7).

Figure 64: Installing the Panel, Method 1.

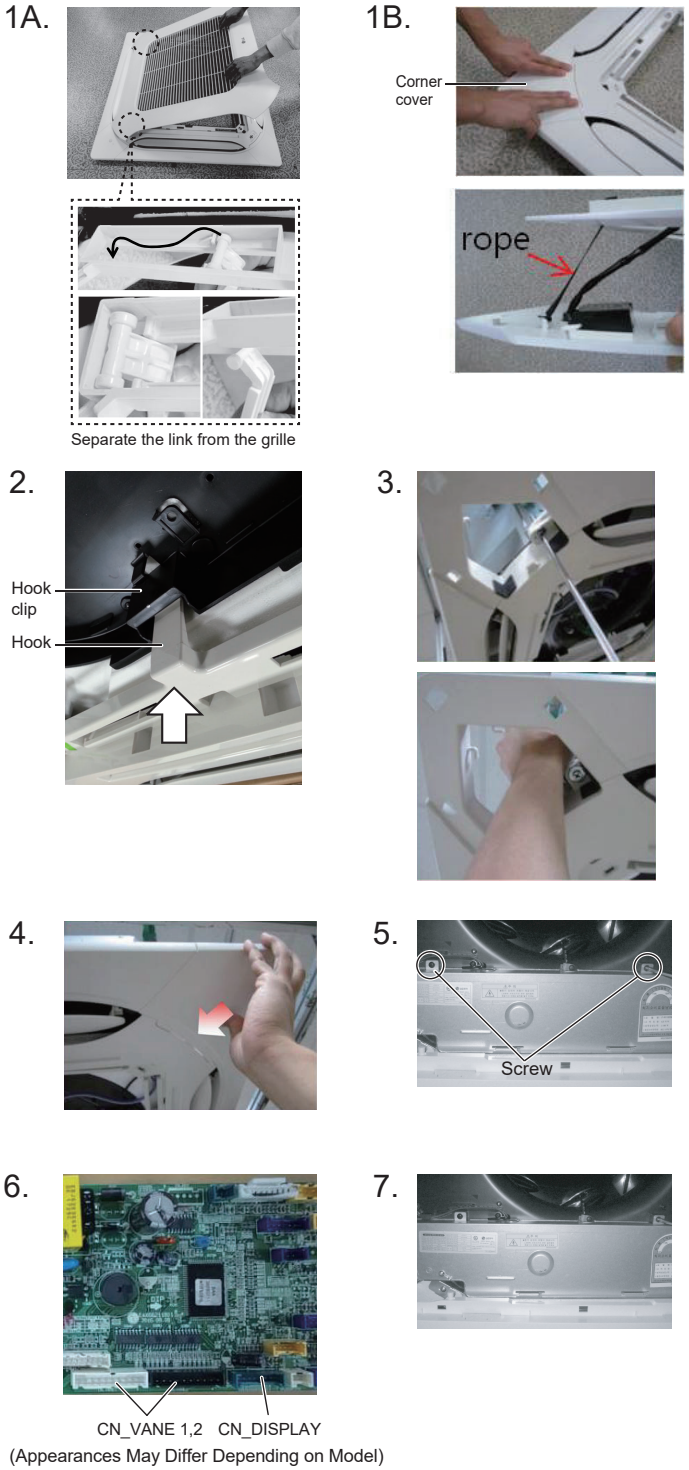

(Appearances May Differ Depending on Model)

Installing the Panel, Method 1, continued.

7. Reattach the air inlet grille link and filter on the panel as shown (8A). After inserting the edge of the grille into the panel (8B), close the door lock (8C), and then press on the left, right, and center sections to ensure a tight fit (8D).

Figure 66: Installing the Panel, Method 1, continued..

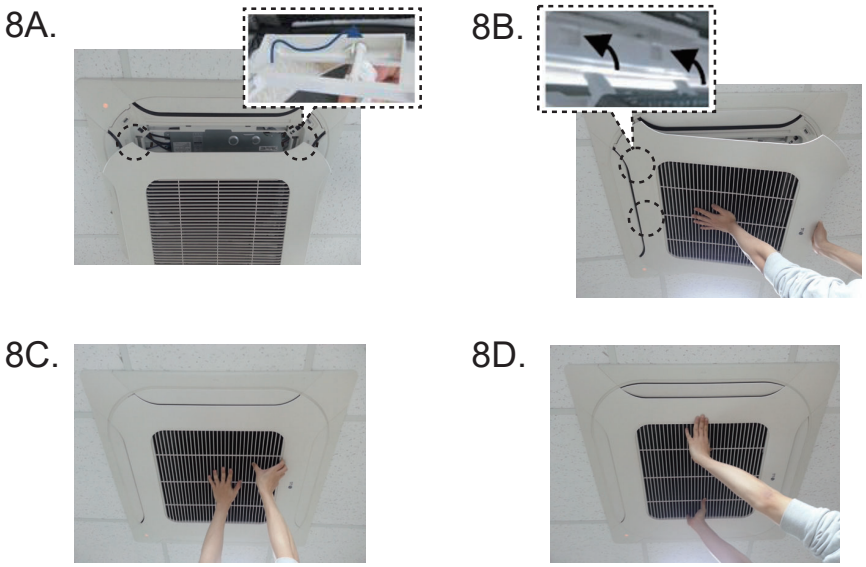

Figure 65: Ensure that no gaps are present between the indoor unit frame and the panel.

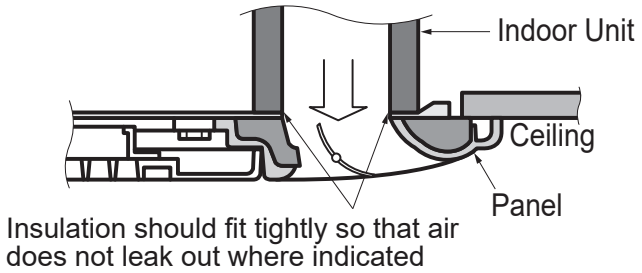

Installing the Panel, Method 2

⚠NOTE

Panel (sold separately) must be installed properly; cool air will leak from any gaps found between the indoor unit frame and the panel, condensation will generate, and cause product and property damage.

1. Remove the packaging and paper template, take out air inlet grille from the panel (1A), and then remove the corner covers of the panel (1B).
2. Attach the panel to the indoor frame by inserting the hooks as shown (2).
3. Insert two screws on diagonal corners of each panel, but ⃠ do not tighten completely (3). The screws to attach the panel to the indoor unit frame are factory-provided and can be found in the shipping box. Verify the panel is aligned with the ceiling. Adjust the height by using the hanging bolts as shown. Insert the other two screws, and then tighten all four screws until panel is secure.
4. Attach the corner covers (4).
5. Unscrew the two screws holding the control panel cover (5) and remove (if not removed already). Set aside the control panel cover for re-installation.
6. Connect the one display connector (CN-DISPLAY) and the two vane control connectors (CN-VANE1, CN-VANE2) of the front panel to the indoor unit PCB (6).
7. Reattach the control panel cover (7). Attach the filter grille retainer arm (inclusion dependent on model) on the front panel as shown (8). The filter grille retainer arm is supplied in the front panel shipping package.
8. Attach the other side of the filter grille retainer arm on the filter guide of the air inlet grille (9), then install the filter and the air inlet grille on the front panel (10).

Figure 67: Installing the Panel, Method 2.

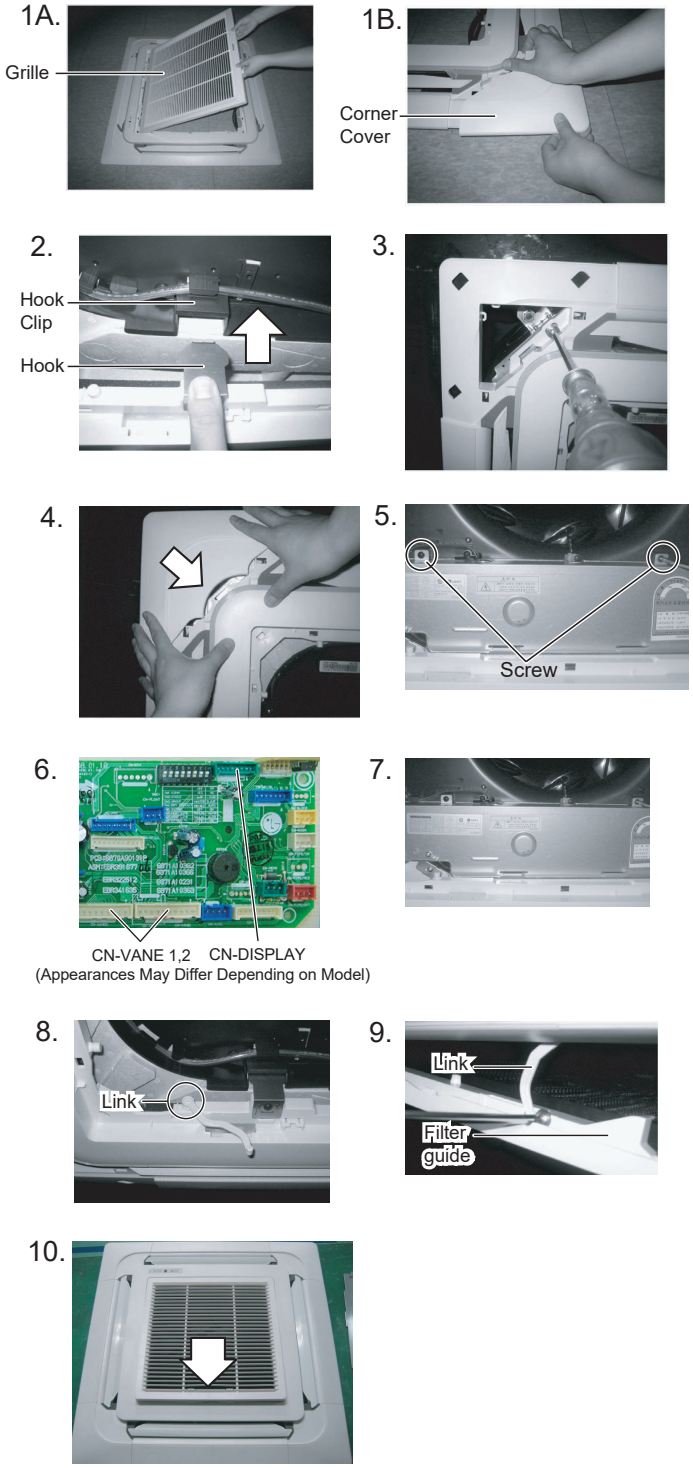

Figure 68: Ensure that no gaps are present between the indoor unit frame and the panel.

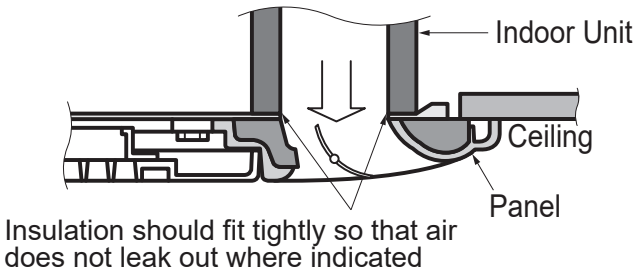

Branch Duct Installation

Note:

Branch duct is an optional accessory that is sold separately.

1. Dimensions for 2x2 Cassette single knockouts are 6-1/2 x 3-1/8 in.
2. Cut the side panel and EPS foam of the cassette indoor unit (follow the cabinet perforations).
3. Install insulation between the cassette indoor unit panel and EPS foam. Ensure that the insulation is installed tightly, securely, and with no gaps.

Figure 69: 2x2 Four-Way Cassette Indoor Unit Branch Duct Option Examples.

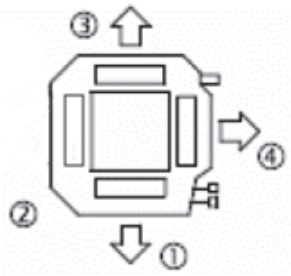

Note:

2x2 Cassette single knockout options: 1, 3, and 4; dimensions: 6-1/2 x 3-1/8 in.

Note:

If there is a gap between the cassette indoor unit panel and the EPS foam, and cold air from the outlet accesses the gap, condensation will form on the cabinet.

Figure 70: Cutting the Cassette Indoor Unit Side Panel and EPS Foam.

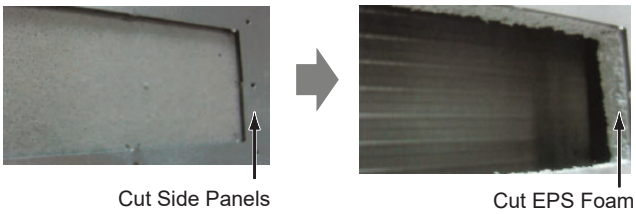

Figure 71: Four-Way Cassette 2x2 Indoor Unit Side Panel Dimensions.

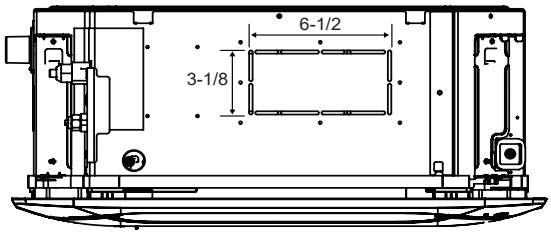

Figure 72: Installing the Insulation.

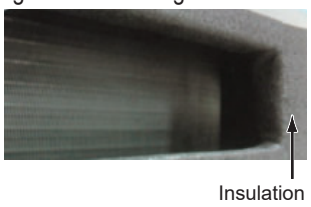

Note:

- *Tightly install insulation to the branch duct hole.*
- *Recommended insulation thickness is more than 3-15/16 inches (10 mm).*
- *If the insulation thickness is less than 3-15/16 inches (10 mm), condensation will form on / in the cabinet.*

4. Tightly attach the duct chamber (sub-duct) on the cassette indoor unit cabinet using screws.
5. Cover the duct chamber (sub-duct) and the whole cassette indoor unit cabinet with insulation.

Note:

If insulation does not cover the whole cabinet, condensation will form.

Figure 73: Installing the Duct Chamber (Sub-Duct).

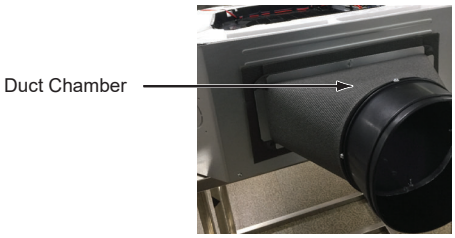

Figure 74: Installing Whole Cabinet Insulation.

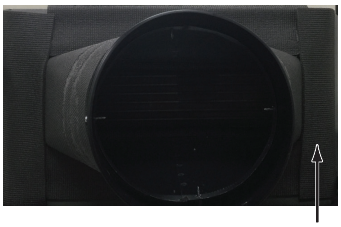

6. Install the insulated flexible duct. Use a clamp to secure so that no leaks from the connection occur.
7. Remove the cassette indoor unit front panel, and install insulation to seal the air outlet on the branch duct side.

Note:

If the air outlet is not sealed properly, the branch duct air flow will decrease.

Figure 75: Installing the Insulated Flexible Duct.

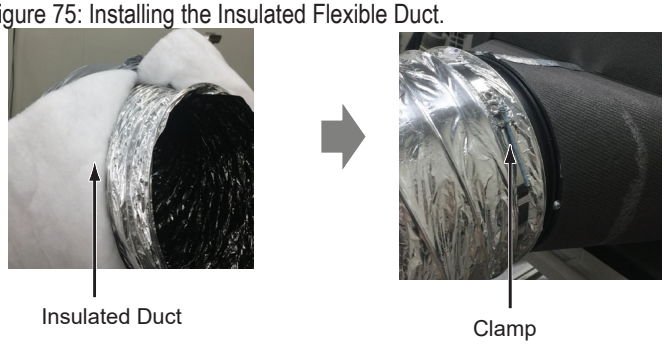

Figure 76: Sealing the Air Outlet on the Branch Duct Side.

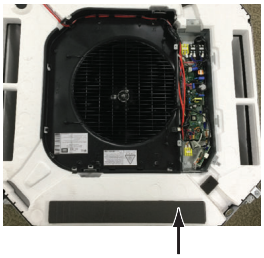

Recommended Air Outlet Insulation Dimension/Thickness

- *See diagram at right and information below for recommended air outlet insulation dimensions.*

E = 19-11/16 inches x 3-1/8 inches (500 mm x 80 mm)

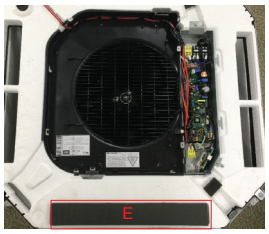

- *Tightly install insulation that covers the entire air outlet.*
- *Recommended insulation thickness is more than 3/16 inches (5 mm).*

Note:

If the insulation thickness is less than 3/16 inches (5 mm), condensation will form on the vane and front panel.

Figure 77: Cassette Indoor Unit Duct System Schematic.

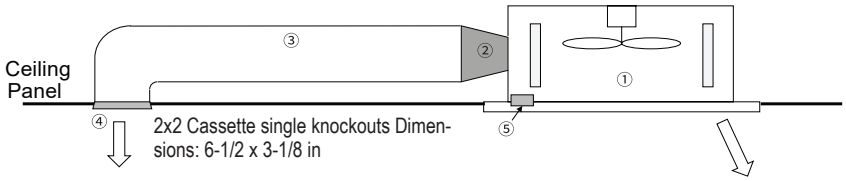

Table 22: Cassette Indoor Unit Duct System Legend.

Label	Component
Factory Supplied (Purchased Separately)	
1	Indoor Unit
Field Supplied	
2	Duct Chamber (Sub-Duct)
3	Duct
4	Vent
5	Air Outlet Insulation

Duct Chamber (Sub-Duct) (2)

Connection between indoor unit and insulated flexible duct.

The duct chamber should be covered by insulation. Thickness of the insulation should be more than 3-15/16 inches (10 mm) on the outside, and 3/16 inches (5 mm). on the inside. If the insulation is not thick enough, condensation will form on the duct chamber (sub-duct).

Duct (3)

Dimensions for 2x2 Cassette single knockouts are 6-1/2 x 3-1/8 in.

The duct should be an insulated flexible duct, or insulation should be installed.

Air Outlet Insulation (5)

Seal the air outlet of the side where the branch duct is installed. The air outlet should be completed sealed to prevent air flow from decreasing.

Note:

- *If the insulation on / in the duct chamber (sub-duct) is not thick enough, condensation will form on / in the cabinet.*
- *If the insulation on the air outlet is not thick enough, condensation will form on the vane and front panel.*
- *If the insulation on the air outlet does not cover it entirely, condensation will form on the vane and front panel.*

Duct System Application

Figure 78: Correct Duct System Application; Ducts Should Supply Air to the Same Area in Which the Indoor Unit is Installed.

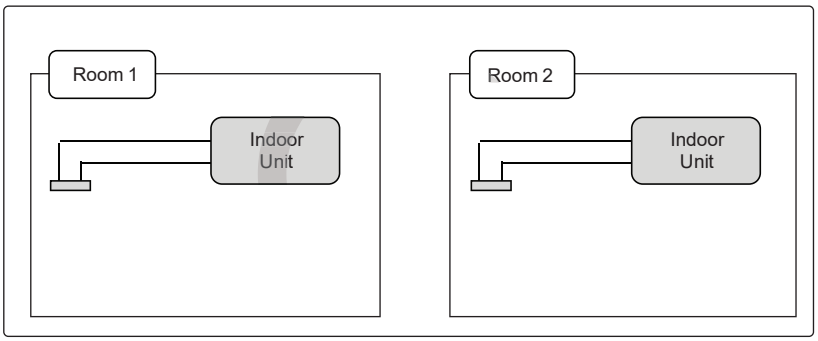

Figure 79: Incorrect Duct System Application.

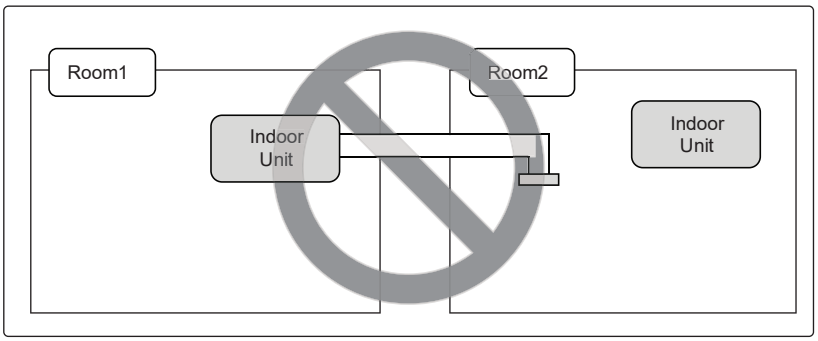

Note:

⃠ Do not connect the branch duct to another room. There will be a reduction in system performance.

Note:

1. Dimensions for single 2x2 Cassette knockouts are 6-1/2 x 3-1/8 in.
2. All components and connections of the duct system should be completely insulated and sealed with no gaps.
3. If the metal duct is installed through a wood wall, electrically insulate the area between the duct and wall (use a plastic sleeve, etc.).
4. ⃠ Do not install the duct as shown in the images below.

Figure 80: Incorrect Duct Installation Examples.

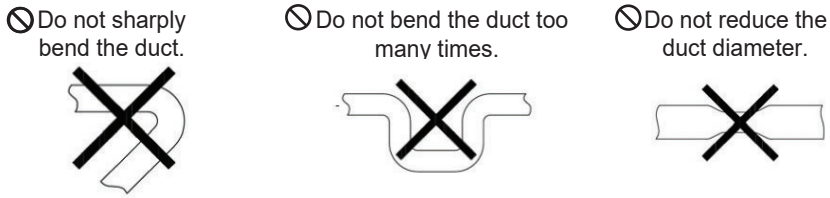

Figure 82: 2x2 Four-Way Cassette Indoor Unit Branch Duct Options.

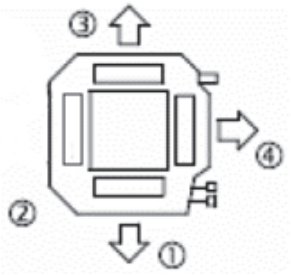

Note:

2x2 Cassette single knockout options: 1, 3, and 4; dimensions: 6-1/2 x 3-1/8 in.

Figure 81: 7,000 to 18,000 Btu/h (TR / TQ) One Side Branch Option P-Q Curves.

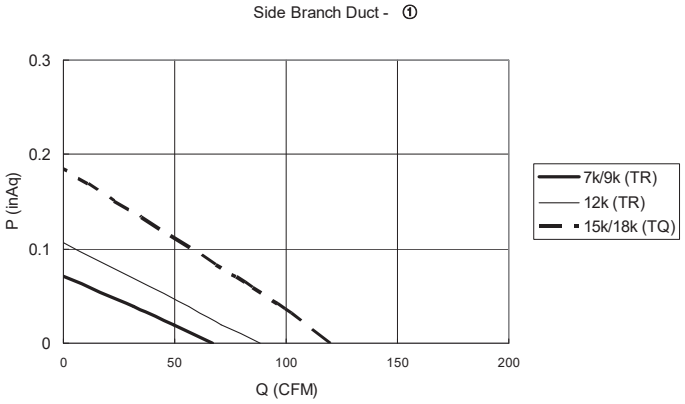

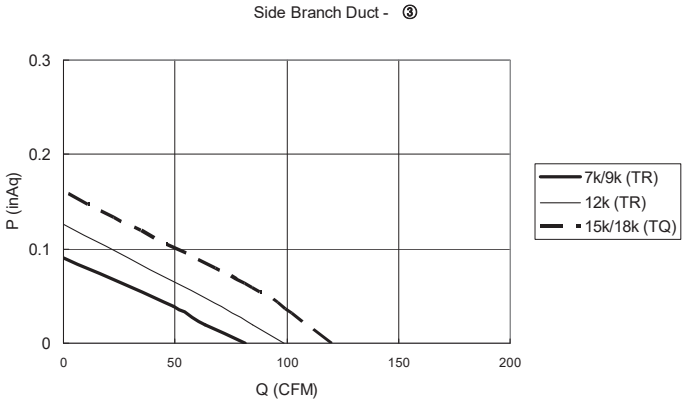

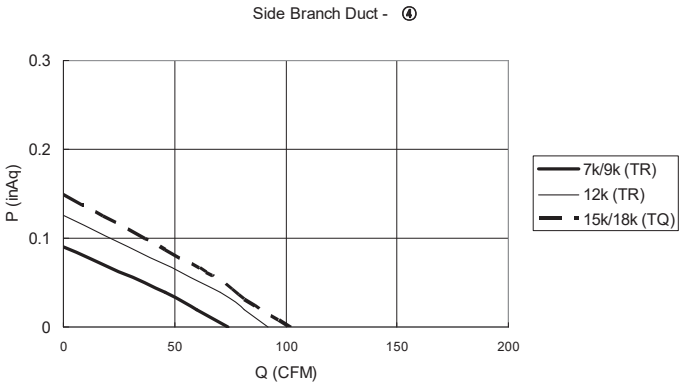

Note:

Do not connect the branch duct to another room. There will be a reduction in system performance.

Figure 83: 9,000 and 12,000 Btu/h TR Frame Outside Air Ventilation with PTVK430 Accessory.

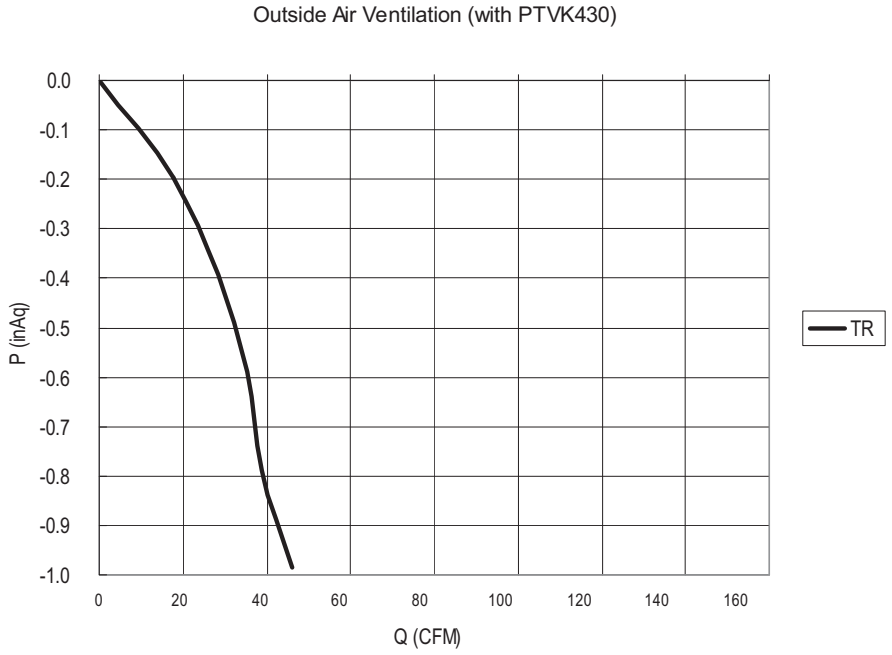

Figure 84: 15,000 and 18,000 Btu/h TQ Frame Outside Air Ventilation with PTVK430 Accessory.

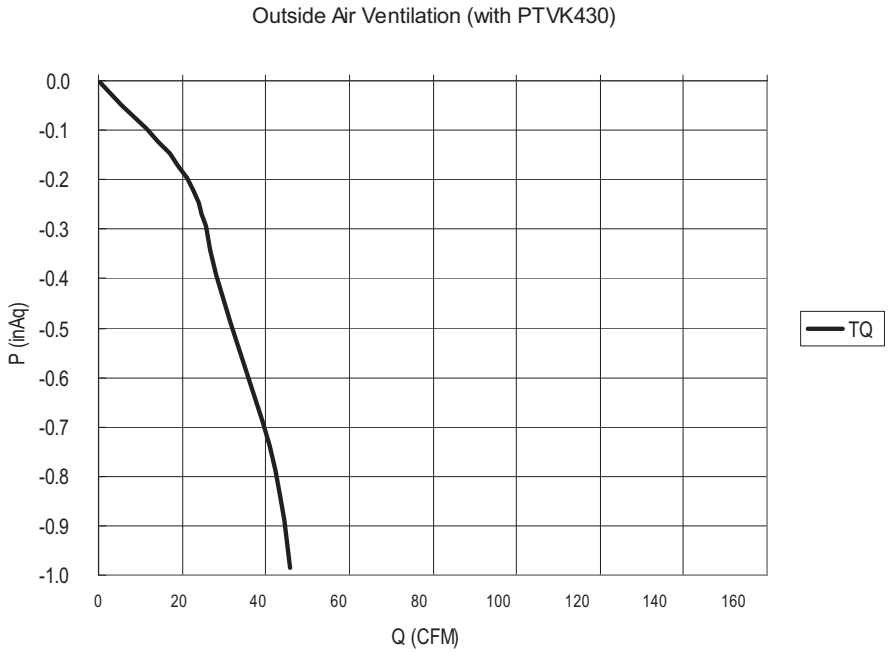

Installing Batteries into the Handheld Remote Controller

For information on using the handheld remote controller, refer to its owner's manual.

1. The remote controller needs two AAA (1.5V) batteries for operation. Remove the battery cover from the back of the remote controller by pushing downward on the tab at the top of the battery cover, and then lift up to remove.

2. Insert the two new batteries.
   - Align batteries by the (+) and (-) sides.
   - The interior battery compartment of the remote controller will have clear markings for the (+) and (-) placement.

3. Verify that the batteries have clicked into the compartment and are firmly engaged with the contacts on either side of them.

4. Reattach the back cover of the remote controller.

5. Proceed with powering on the remote controller and use as needed. Remove the batteries if system won't be used for an extended time.

Figure 85: Installing the Remote Controller Batteries.

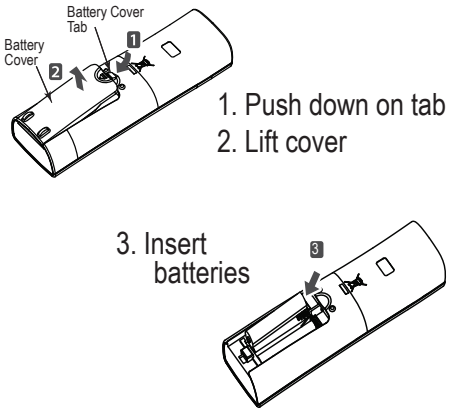

Installer Setting Modes

Installer Setting Mode sets system functions. Only trained and licensed HVAC technicians should access / use the Installer Setting Mode. If any installation procedure or system change is performed by someone other than a trained and licensed HVAC technician, LG is not responsible for the results, and it will void the warranty.

⚠WARNING

If the Installer Setting Mode(s) is (are) not set correctly, a system malfunction could cause fire, electrical shock, physical injury and / or death.

⚠NOTE

If the Installer Setting Mode(s) is (are) not set correctly, a system malfunction could cause product and / or property damage.

Figure 86: Entering the Installer Setting Mode.

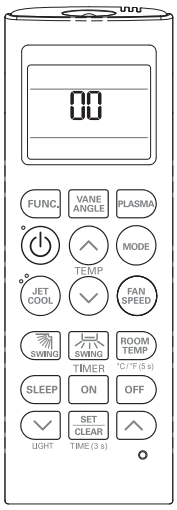

Entering Installer Setting Mode

1. On the handheld controller, press both the “Reset” and “Jet Cool” buttons. A very slender tool is needed to access the “Reset” button.
2. Set the function code and values by using the Up and Down Temperature buttons (see the Installer Setting Codes table). The Up Temperature button changes the code on the ten (10) digit; the Down Temperature button changes the code on the one (1) digit.
3. After setting the function code(s), aim the handheld controller at the indoor unit, and press the On / Off button one (1) time.
4. Reset the handheld controller to access the general operation mode.

Installer Setting Codes

Table 23: Installer Setting Codes.

No.	Function	Function Code	Setting Value	Handheld Controller LCD
0	Mode Override	0	0: Set to Main	$0._0$
			1: Set to Sub	$0._1$
1	Ceiling Height Selection	1	1: Standard	$1._1$
			2: Low	$1._2$
			3: High	$1._3$
			4: Super High	$1._4$
2	Group Control	2	0: Set to Main	$2._0$
			1: Set to Sub	$2._1$
			2: Check Main / Sub	$2._2$
	Auxiliary Heater	2	3: Set to Auxiliary Heater	$2._3$
			4: Cancel Auxiliary Heater	$2._4$
			5: Check Auxiliary Heater Installation	$2._5$

Mode Override

Use Mode Override only with non-autochangeover heat pump models.

Ceiling Height Selection

Use when a wired remote controller is connected to the cassette indoor unit, and operates with the wired remote controller settings.

Group Control

Use for group control. ⃠ Do not use this function if the system is not set up for group control.

Note:

After setting Group Control, turn the power OFF, wait for one (1) minute, and then turn the power back on.

Auxiliary Heater

This function is only applicable to systems that have the auxiliary heater installed / activated.

Setting the Central Control Address

Set the central control address when the system is controlled through a central controller and a PI-485 is installed.

1. On the handheld controller, press both the “Reset” and “Mode” buttons. A very slender tool is needed to access the “Reset” button.
2. Use the Up and Down Temperature buttons to set the indoor unit central control address. Setting range: 00 ~ FF.
3. After setting the address, aim the handheld controller at the indoor unit, and press the On / Off button one (1) time.
4. The indoor unit will display the control address setting. Display time and method will differ by indoor unit type.
5. Reset the handheld controller to access the general operation mode.

Figure 87: Setting the Central Control Address.

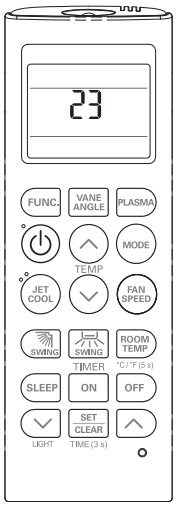

Checking the Central Control Address

1. On the handheld controller, press both the “Reset” and “Func” buttons. A very slender tool is needed to access the “Reset” button.
2. Aim the handheld controller at the indoor unit, and press the On / Off button one (1) time.
3. The indoor unit will display the control address setting. Display time and method will differ by indoor unit type.
4. Reset the handheld controller to access the general operation mode.

FC-15 / FC-6 (Thermo On / Off Differential)

Allows installer setting (field adjustment) of temperature targets. Use FC-15 / FC-6 in applications to overcome the height difference with indoor units installed high on the wall or in the ceiling.

Both wired (FC-15) and handheld wireless (FC-6) controllers can access the thermo on / off differential. Indoor unit logic must include the function to see the setting codes. If the function is visible, all sub-settings will display, even if the indoor unit logic is limited.

Note:

- *Indoor unit logic limits may prevent all sub-settings from being assignable.*
- *A sub-setting that isn't recognized by the indoor unit will revert to the default setting.*
- *The controller will display all sub-settings if the function is available for the indoor unit. Contact an LG Representative for details.*

Table 24: Wired Controller Settings FC-15 Set Codes and Displays.

Function	Code	Setting		Step	Display
		TH On	TH Off		
Optional Heating Thermo On / Off	FC-15	Default		0	15:00
		7°F	11°F	1	15:01
		4°F	7°F	2	15:02
		-2°F	2°F	3	15:03
		-1°F	1°F	4	15:04

Table 25: Wireless Handheld Controller Settings FC-6 Set Codes and Displays.

Function	Code	Setting		Step	Display
		TH On	TH Off		
Optional Heating Thermo On / Off	FC-6	Default		0	6:0
		7°F	11°F	1	6:01
		4°F	7°F	2	6:02
		-2°F	2°F	3	6:03
		-1°F	1°F	4	6:04

FC-35 (Thermo Off - Indoor Unit Fan Off)

Turns off the indoor unit fan during Thermo Off. Requires an LG wired controller to configure / set the installer code.

Table 26: Wired Controller Settings FC-35 Set Codes and Displays.

Function	Code	Setting	Step	Display
Indoor Unit Fan Off During Thermo Off	FC-35	Indoor Unit Default Airflow (Logic)	0	35:00
		Indoor Unit Fan OFF	1	35:01
		Setting Airflow	2	35:02

FC-56 / FC-9 (Indoor Unit Standby Mode)

Multi F indoor units can be set to “Standby Mode” (installer setting) that adjusts the indoor unit mode to prevent a “mixed mode” error. During mixed operation, operation mode > standby function.

Table 27: Wired Controller Settings FC-56 Set Codes and Displays.

Function	Code	Setting	Step	Display
Indoor Unit Standby Mode	FC-56	Default (Off); Must assign installer setting	0	56:00
		Function On	1	56:01

Table 28: Wireless Handheld Controller Settings FC-9 Set Codes and Displays.

Function	Code	Setting	Step	Display
Indoor Unit Standby Mode	FC-9	Function Default (Off); Must assign installer setting	0	9A
		Function On	1	9B

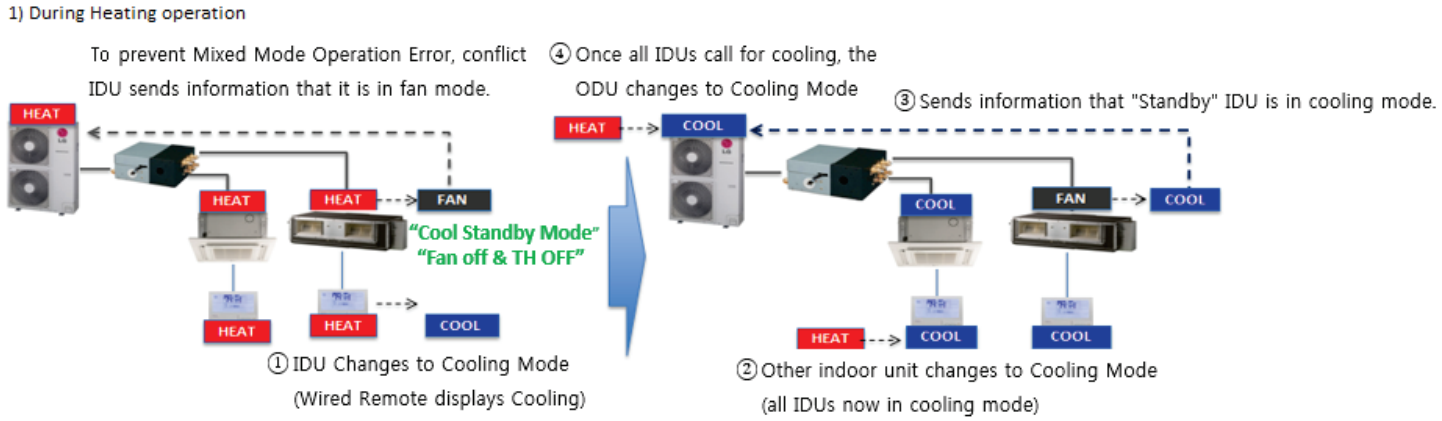

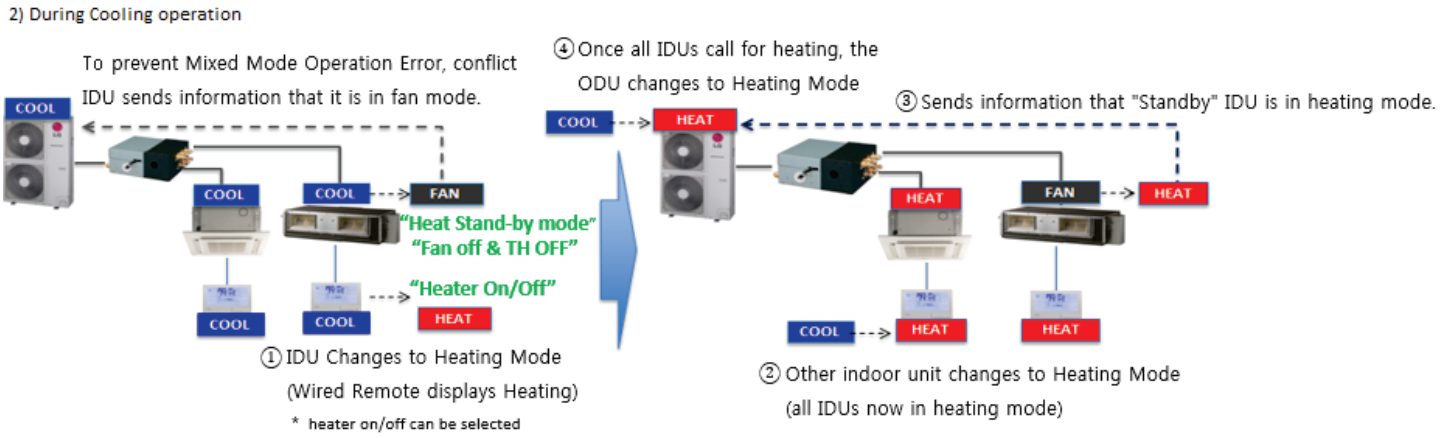

Four-Way Ceiling Cassette Indoor Unit Error Indicator

Figure 88: Ceiling Cassette Display.

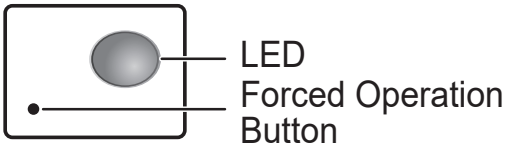

Table 29: Four-Way Ceiling Cassette Indoor Unit LED Indications.

Description	LED Color
Cooling Mode	Green
Heating Mode	Green
Clean Filter (When System is Operating In Cooling or Heating Mode)	Yellow-Green
Clean Filter (When System Is NOT Operating)	Orange
Hot Start or Defrost Mode before System Starts Heating Mode	Green
Turned On Because of Scheduling (With a Programmable Controller)	Yellow-Green

Troubleshooting Using Error Codes

Refer to the table below and on the next page for information on the error codes that are generated from the indoor and outdoor units. These codes are the most common that will manifest through these units. The system installed might generate additional codes not listed here. Contact an LG trained service provider if these types of errors are seen, and a simple power down and boot up has not corrected the issue. The end user should not attempt to fix the system.

Error Codes

- Error codes indicate different types of unit failures, assists in self-diagnosis and to track the frequency of occurrence.
- Error codes are shown on the LEDs of indoor units, wired remote controller, the outdoor unit control board, and LG Monitoring View (LGMV) Diagnostic Software.
- Error codes on the LED flash ON / OFF as presented in the table below.
- If two or more errors occur simultaneously, the highest priority error code is displayed.
- After error is resolved, the error code is simultaneously released and does not display.
- To operate the system again after an error code occurs and has been resolved, cycle the power.
- Error code displays differ depending on model.

Table 30: Ceiling Cassette Indoor Unit Error Codes.

Error Code	Description	Details	Indoor Unit Operation Status
1	Indoor Unit Room Air Temperature Room Sensor Error	Indoor unit air temperature sensor is disconnected, shorted, or opened.	Off
2	Indoor Unit Inlet Pipe Sensor Error	Indoor unit inlet pipe temperature sensor is disconnected, shorted, or opened.	Off
3	Remote Controller Error	Indoor unit PCB is not receiving a signal from the wired remote controller (if installed).	Off
4	Drain Pump Error	Drain pump malfunction.	Off
5	Communication Error Between Indoor Unit and Outdoor Unit	Indoor unit PCB is not receiving signal from outdoor unit.	Off
6	Indoor Unit Outlet Pipe Sensor Error	Indoor unit outlet pipe temperature sensor is disconnected, shorted, or opened.	Off
9	Indoor Unit EEPROM Error	Indoor unit EEPROM serial number marked on is 0 or FFFFFF.	Off
10	Indoor Unit BLDC Motor Fan Lock	Indoor unit fan motor connection is disconnected. Indoor unit fan motor lock has failed.	Off

Troubleshooting Using Error Codes - Continued

Table 31: Multi F / Multi F MAX (Standard or LGRED) Outdoor Unit Error Codes.

Error Code	Description	No. of Times Outdoor Unit LEDs Blink		Outdoor Operation Status
		LED01 (Red)	LED02 (Green)	
21	DC Peak (IPM Fault); Compressor DC voltage was too high	2X	1X	OFF
22	Current Transformer2 (CT2) error; Alternating current (AC) input too high	2X	2X	OFF
23	DC Link Low Voltage (DC Link Voltage is <140VDC) DC Link High Voltage (DC Link Voltage is >420VDC)	2X	3X	OFF
25	AC Low / High Voltage	2X	5X	OFF
26	DC Compressor Position Error (Compressor failed to start properly)	2X	6X	OFF
27	PSC / PFC Fault; Input current to inverter compressor PCB is too high	2X	7X	OFF
29	Current to inverter compressor is too high	2X	9X	OFF
32	Inverter compressor discharge pipe (D-Pipe) temperature is too high	3X	2X	OFF
35	Low Pressure Error; Pressure dropped below recommended limits	3X	5X	OFF
39	Communication Error between PFC MICOM and Inverter MICOM	3X	9X	OFF
40	CT Sensor Error; Thermistor is disconnected or has shorted out	4X	-	OFF
41	Inverter compressor discharge pipe (D-Pipe) sensor is disconnected or has shorted out	4X	1X	OFF
43	High pressure sensor is disconnected or has shorted out	4X	3X	OFF
44	Outdoor air sensor is disconnected or has shorted out	4X	4X	OFF
45	Mid-pipe thermistor of outdoor unit condenser is disconnected or has shorted out	4X	5X	OFF
46	Outdoor unit suction piping thermistor is disconnected or has shorted out	4X	6X	OFF
48	Outlet piping (liquid) of condenser is disconnected or has shorted out	4X	8X	OFF
51	Combination ratio (capacity) is out of range; Total nominal indoor unit capacity is<50% or >130% of the outdoor unit capacity	5X	1X	OFF
53	Communication failure between outdoor unit and indoor unit(s)	5X	3X	OFF
54	Outdoor unit is not wired properly (ex: reversed phase)	5X	4X	OFF
60	Outdoor unit printed circuit board (PCB) EEPROM check sum error	6X	-	OFF
61	Condenser coil thermistor temperature is too high	6X	1X	OFF
62	Outdoor unit inverter compressor PCB heat sink temperature is too high	6X	2X	OFF
65	Heat sink thermistor is disconnected or has shorted out	6X	5X	OFF
67	Outdoor unit brushless direct current (BLDC) fan motor lock error	6X	7X	OFF
73	Outdoor unit PFC overcurrent (peak) error	7X	3X	OFF

Refer to Service Manuals posted on www.lghvac.com for a full description of all error codes and workarounds.

INSTALLATION CHECKLIST

PAGE 1 of 2

System ID No.: _____ Indoor Unit ID.: _____

Checked by: _____ Date:_____ Signature:_____

Major Component Rough-In

Description	Check
The unit was connected properly per local code and the product installation procedures.	
All literature and bagged accessories have been removed from the fan discharge (ducted and cassette model indoor units).	
All indoor units and branch distribution unit(s) (Multi F MAX only, Standard or LGRED) are installed, properly supported, and located indoors in a non-corrosive environment.	

Piping Material, Components, and Insulation

Description	Check
Multi-zone duct-free split systems: ACR copper piping rated at the system working pressure was used.	
LG Y-branch fitting was used per manufacturer's recommendations.	
All refrigerant pipes and valves were insulated separately. Insulation is positioned up against the walls of the indoor units and branch distribution units (Multi F MAX only, Standard or LGRED). No gaps shown. Insulation was not compressed at clamps and hangers.	

Brazing Practices

Description	Check
Use medical grade dry nitrogen for purging during brazing (constant 3 psig while brazing).	
15% silver brazing material only.	

Refrigerant Piping

Description	Check
You must have in your possession a copy of the "As-Designed" LATS piping tree diagram. BEFORE ANY FIELD PIPE SIZE OR LENGTH CHANGES ARE MADE, PROPOSED CHANGES MUST BE FORWARDED TO THE DESIGN ENGINEER SO THAT THEY CAN INPUT THE CHANGES INTO LATS and RE-ISSUE A NEW LATS MULTI F PIPING TREE DIAGRAM. Installer must receive change authorization from the design engineer, because any change made requires the review of the entire tree diagram and verification that the change did not impact the size of piping segments in other parts of the system.	
All pipe materials were properly stored, capped, and clean. All burrs were removed after cutting and pipe ends were reamed before brazing.	
During refrigerant pipe installation, for each segment of pipe, a record was made of the pipe length (including expansion loops, offsets, double-back sections), and sizes, as well as the quantity and type of elbows used.	
Expansion loops, coils or other acceptable measures are provided where necessary to absorb temperature-change based pipe movement.	
A torque wrench and backup wrench were used to tighten all flare connections.	
The back side of all flares were lubricated with a small drop of PVE refrigeration oil before tightening flare fittings.	
Ensure all field made flares are 45°. Use factory-supplied flare nuts only.	
Pipe segments and Y-branch fittings are secured to the structure using a combination of fixed and floating clamps, and all wall penetrations were sleeved.	
Pipe insulation was not compressed at any point.	
Y-branch fittings were properly INSTALLED per details provided in the Multi F / Multi F MAX (Standard or LGRED) Outdoor Unit Installation Manual.	
Y-branch fittings were properly SUPPORTED per details provided in the Multi F / Multi F MAX (Standard or LGRED) Outdoor Unit Installation Manual.	
No oil traps, solenoid valves, sight glasses, filter driers, or any other unauthorized refrigerant specialties were present.	
(Optional) R410A rated full port ball valves were used at all indoor units and wherever appropriate in the refrigerant piping network.	

INSTALLATION CHECKLIST

MULTI F
MULTI F MAX

System ID No.: _____ Indoor Unit ID.: _____

Checked by: _____ Date:_____ Signature:_____

Condensate Pump / Drain Installation

Description	Check
Condensate piping installed correctly on indoor units. Material used is acceptable under local code. Insulated as necessary to prevent condensation.	
All condensate vertical risers are equal to or less than 27-9/16" from the bottom of the indoor unit.	
Indoor units with condensate pumps were level. Units with gravity drains were level or slightly canted toward the drain connection and are supported properly. Pumped condensate drain lines were properly connected (no traps, and connect to the top surface of the main drain line).	
Multi F / Multi F MAX (Standard or LGRED) outdoor unit gravity condensate drain line was connected and routed where it properly drains away or, if installed in a mechanical room, was connected and properly routed to a drain terminal.	
All condensate lines were properly insulated to prevent condensation.	

Power Wire and Communications Cables

Description	Check
Ground wire was installed and properly terminated at the unit.	
Power wiring was connected to a single phase 208-230V source.	
Ground wire was installed and properly terminated at the unit.	
The power supplied was clean with voltage fluctuations within specifications. (±10% of nameplate).	
Power wiring to the Multi F / Multi F MAX (Standard or LGRED) outdoor unit was field supplied, solid or stranded, and installed per all local, state, and NEC requirements.	
For Multi F Systems (Standard or LGRED) • Communication / connection (power) wiring from the outdoor unit to the indoor unit is minimum 14 gauge, four-conductor, stranded, shielded or unshielded. If shielded, must be grounded to chassis at the outdoor unit only. • Use of 14 AWG, four (4) conductor, stranded, shielded or unshielded wire is allowed for lengths up to the published maximum pipe length, plus recommended slack at both ends.	
For Multi F MAX (Standard or LGRED) Systems All power wiring / communication cable to be minimum 14 AWG from the Multi F MAX outdoor unit to the BD unit stranded, shielded or unshielded (if shielded, it must be grounded to the chassis of the outdoor unit only), and must comply with applicable local and national codes. • Communication / connection (power) wiring from the BD unit to the indoor unit is minimum 14 gauge, four-conductor, stranded, shielded or unshielded. If shielded, must be grounded to chassis at the BD unit only. • Use of 14 AWG, four (4) conductor, stranded, shielded or unshielded wire is allowed for lengths up to the published maximum pipe length, plus recommended slack at both ends.	
Power wiring to the outdoor unit and communication / connection (power) cable from the outdoor unit to the indoor units or branch distribution units (Multi F MAX only, Standard or LGRED) were separated per manufacturer's guidelines. These cannot be run in the same conduit.	
Communications / connection (power) cable were run in the same conduit (outdoor unit to indoor unit or branch distribution unit [Multi F MAX only, Standard or LGRED) as provided in the product installation manual.	
Proper communications cable was used between each indoor unit and its zone controller where applicable. No cables were spliced and no wire nuts are present.	
Communication type RS-485–BUS type.	
Used appropriate crimping tool to attach ring or fork terminals at all power wiring and control cable terminations.	
Only LG-supplied Y-cables were used between grouped indoor units, if applicable.	

LG

Inverter

162279 CSA® US

UL REGISTERED FIRM DQS Inc.

For further technical materials such as submittals, engineering manuals, service manuals, and catalogs, visit www.lghvac.com.

LG Life's Good

LG Electronics, U.S.A., Inc.
Air Conditioning Technologies
4300 North Point Parkway
Alpharetta, Georgia 30022
www.lghvac.com

IM_Multi_F_CeilingCassette_11_23
Supersedes: IM_Multi_F_CeilingCassette_10_23
IM_Multi_F_CeilingCassette_01_22
IM_Multi_F_CeilingCassette_10_20
IM_Multi_F_CeilingCassette_7_16
IM_Multi_F_CeilingCassette_9_15