ALLIED™ Commercial

**PACKAGED ELECTRIC/ELECTRIC**

# ZC

## Z-Series Rooftop Units

**50 HZ**

Bulletin No. ZC-036-072 (5/2016)

***PRODUCT SPECIFICATIONS***

Z-SERIES™

DESIGNED TO FIT. FAST.

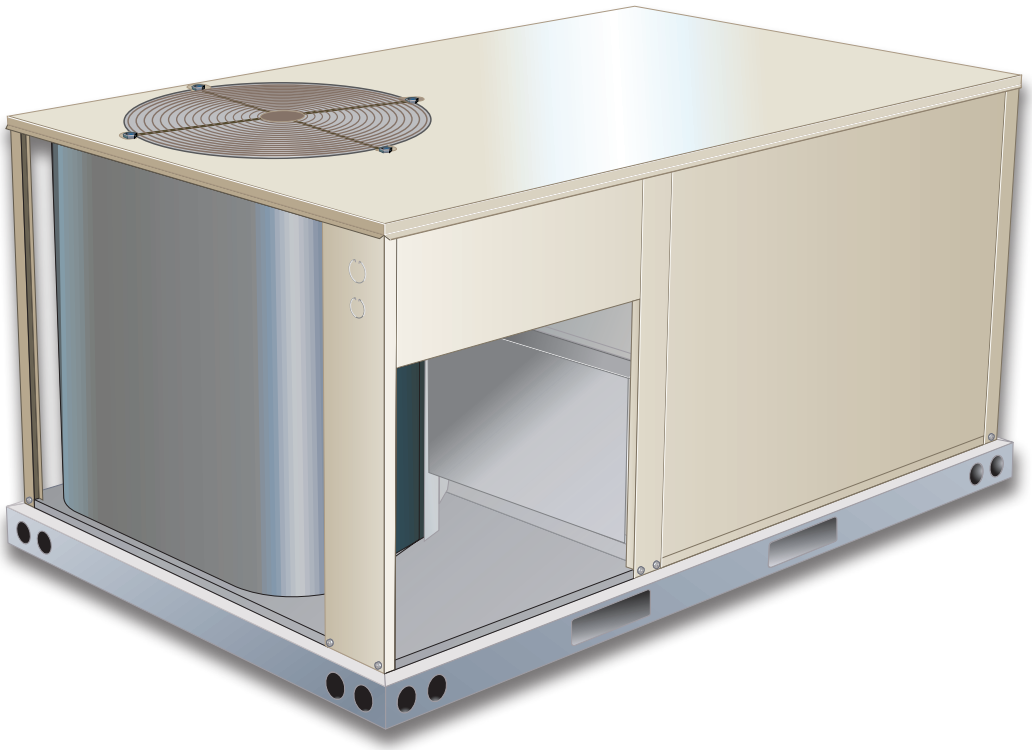

**10.5 to 21 kW (3 to 6 Tons)**
**Net Cooling Capacity – 8.6 to 14.3 kW (29 200 to 48 800 Btuh)**
**Optional Electric Heat - 3.8 to 23 kW**

## MODEL NUMBER IDENTIFICATION

**Z C B 060 S 4 B N 1 M**

**Brand/Family**
Z = Z-Series Product Line

**Unit Type**
C = Packaged Electric Cooling w/ optional Electric Heat

**Major Design Sequence**
A = 1st Generation
B = 2nd Generation

**Nominal Cooling Capacity**
036 = 10.5 kW (3 Ton)
048 = 14.0 kW (4 Ton)
060 = 17.5 kW (5 Ton)
072 = 21 kW (6 Ton)

**Cooling Efficiency**
S = Standard Efficiency

**Refrigerant Type**
4 = R-410A

**Blower Type**
B = Belt Drive

**Factory Installed Electric Heat**
N = No Heat

**Minor Design Sequence**
1 = 1st Revision
2 = 2nd Revision
3 = 3rd Revision

**Voltage**
M = 380/420V–3 phase-50hz

## FEATURES AND BENEFITS

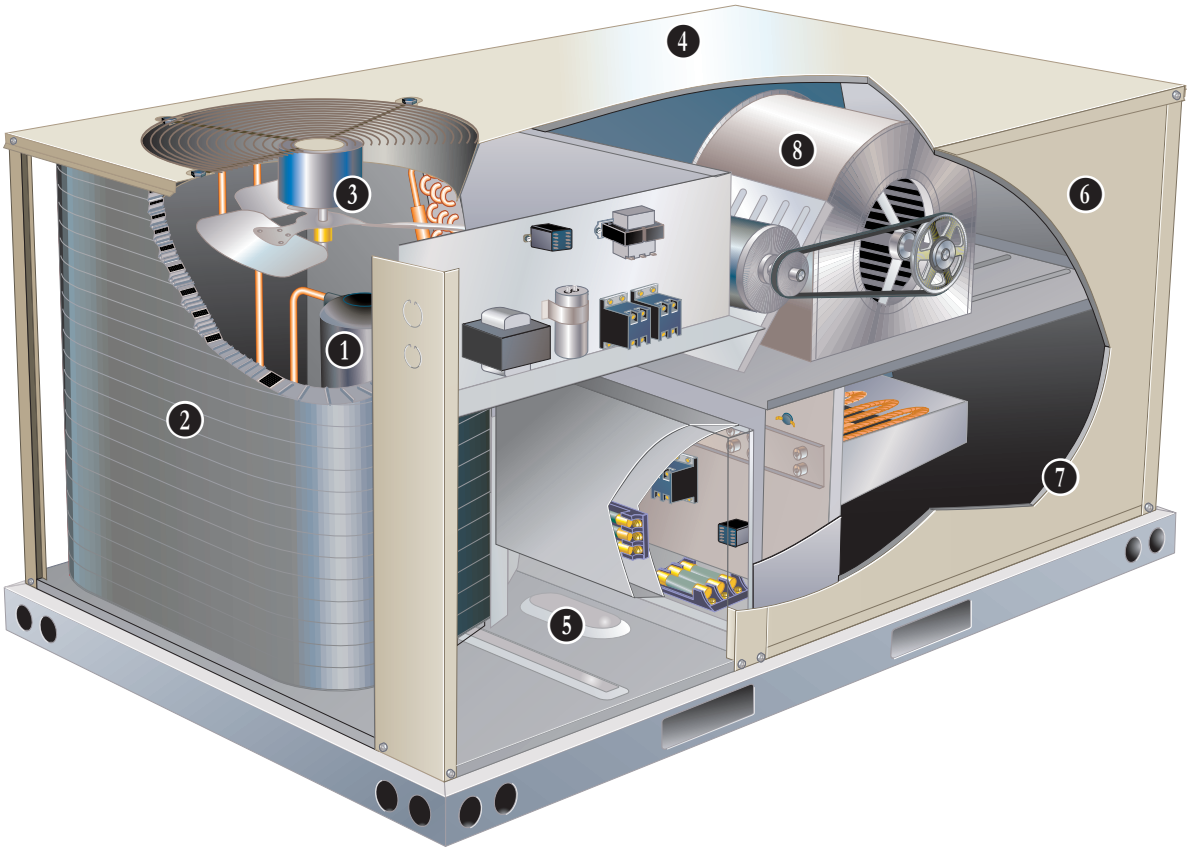


Z-Series rooftop units from Allied are the new standard for cost efficient, reliable rooftop units built for long-lasting performance that can significantly improve indoor environments. Z-Series rooftop units feature:

- **Quick and Easy Retrofit -** Fast installation for replacement of many existing rooftop units - fits high volume competitor's roof curbs.
- **R-410A Refrigerant -** Environmentally friendly.
- **Scroll Compressors -** Single speed scroll compressor is furnished on all models.
- **Eco-**Last™ Coil System - Smaller, lighter condenser coil.
- **High Pressure Switch -** Protects compressor.
- **Belt Drive Blower Motor -** To maximize air performance.
- **Downflow or Horizontal Airflow -** Easy field conversion.
- **Two Fork Lift Slots on Three Sides -** Easy to pick up and transport units from almost any angle.
- **Corrosion-Resistant Drain Pan -** Provides application flexibility, durability, and improved serviceability.
- **Common Components -** Many maintenance items are standard throughout the entire product line, reducing the need to carry different parts to the job or maintain in inventory.

## CONTENTS


Blower Data - Belt Drive - Downflow . . . . . .16
Dimensions - Accessories. . . . . .40
Dimensions - Unit - ZCA . . . . . .38
Dimensions - Unit - ZCB . . . . . .39
Electrical Data - ZCA . . . . . .32
Electrical Data - ZCB . . . . . .33
Electric Heat Capacities. . . . . .34
Features And Benefits . . . . . 2
Model Number Identification . . . . . 1
Options / Accessories . . . . . 8
Outdoor Sound Data . . . . . .36
Ratings - ZCA . . . . . .12
Ratings - ZCB . . . . . .14
Specifications - ZCA . . . . . .10
Specifications - ZCB . . . . . .11
Unit Clearances . . . . . .35
Weight Data . . . . . .37


## TESTING

Components bonded for grounding to meet safety standards for servicing required by Underwriters Laboratories (UL) and the International Electrotechnical Commission (IEC).

Cooling performance is rated at test conditions included in Air-Conditioning, Heating and Refrigeration Institute (AHRI) Standards 210/24-02008 (3 - 5 ton models) and 340/360-2007 (6 ton models) while operating at rated voltage and air volumes.

International Organization for Standardization (ISO) 9001 Registered Manufacturing Quality System.

## COOLING SYSTEM

Designed to maximize sensible and latent cooling performance at design conditions.

System can operate from 2°C to 52°C without any additional controls.

**R-410A Refrigerant**
Non-chlorine based, ozone friendly, R-410A.

Unit is factory pre-charged with refrigerant. See Specifications Table.

**1 Compressor**
Scroll compressors for high performance, reliability and quiet operation.

Resiliently mounted on rubber grommets for quiet operation.

**Compressor Crankcase Heater**
Protects against refrigerant migration that can occur during low ambient operation.

**High Pressure Switch**
Protects the compressor from overload conditions such as dirty condenser coils, blocked refrigerant flow, or loss of outdoor fan operation.

Automatic reset.

**Filter/Drier**
High capacity filter/drier protects the system from dirt and moisture.

**2 Eco-Last™ Coil System**

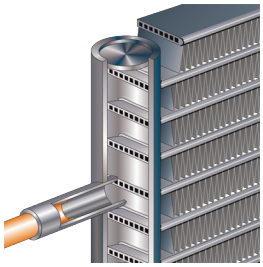

Condenser coil features lightweight, all aluminum brazed fin construction.

Constructed of three components: a flat extrusion tube, fins in-between the flat extrusion tube and two refrigerant manifolds.

Eco-Last™ Coil System Features:

- Improved heat transfer performance due to high primary surface area (flat tubes) versus secondary surface (fins).
- Smaller internal volume (reduced refrigerant charge).
- High durability (all aluminum construction).
- Fewer brazed joints.
- Compact design (reduces unit weight).
- Easy maintenance/cleaning.

Mounting brackets with rubber inserts secure coil to unit providing vibration dampening and corrosion protection.

**Evaporator Coil**
Copper tube construction, enhanced rippled-edge aluminum fins, flared shoulder tubing connections, silver soldered construction for improved heat transfer. Factory leak tested. Cross row circuiting with rifled tubing optimizes both sensible and latent cooling capacity.

**Condensate Drain Pan**
Plastic pan, sloped to meet drainage requirements of the American Society of Heating Refrigeration and Air Conditioning Engineers (ASHRAE) 62.1.

End drain connection.

## COOLING SYSTEM (continued)

❸ **Outdoor Coil Fan Motor**
Thermal overload protected, totally enclosed, permanently lubricated bearings, shaft down, fan guard mount.

**Outdoor Coil Fan Guard**
Polyvinyl chloride (PVC) coated fan guard furnished.

### Required Selections

**Cooling Capacity**
Specify nominal cooling capacity of the unit.

### Options / Accessories

**Field Installed**

**Condensate Drain Trap**
Field installed only.

Available in copper or polyvinyl chloride (PVC).

**Drain Pan Overflow Switch**
Monitors condensate level in drain pan, shuts down unit if drain becomes clogged.

**Low Ambient Kit**
Cycles the outdoor fan while allowing compressor operation in the cooling cycle. This intermittent fan operation allows the system to operate without icing the evaporator coil and losing capacity. Designed for use in ambient temperatures no lower than -18°C. A crankcase heater must be installed on the compressor.

## CABINET

❹ **Construction**
Heavy-gauge steel panels and full perimeter heavy-gauge galvanized steel base rail provides structural integrity for transportation, handling, and installation.

Base rails have rigging holes. Three sides of the base rail have fork slots.

Raised edges around duct and power entry openings in the bottom of the unit provide additional protection against water entering the building.

**Airflow Choice**
Units are shipped in downflow (vertical) configuration, can be field converted to horizontal air flow configuration without the need of a kit.

❺ **Power Entry**
Electrical lines can be brought through the unit base or through horizontal access knock-outs.

Optional Bottom Power Entry Kit is available.

❻ **Exterior Panels**
Constructed of heavy-gauge, galvanized steel with a two-layer enamel paint finish.

❼ **Insulation**
All panels adjacent to conditioned air are fully insulated with non-hygroscopic fiberglass insulation.

**Access Panels**
Access panels are provided for the compressor, heating, controls, blower and air filter/economizer section.

### Options / Accessories

**Factory Installed**

**Corrosion Protection**
A completely flexible immersed coating with an electro-deposited dry film process. (AST ElectroFin E-Coat) Meets Mil Spec MIL-P-53084, ASTM B117 Standard Method Salt Spray Testing.

Indoor Corrosion Protection:
- Coated coil

Outdoor Corrosion Protection:
- Coated coil

**Field Installed**

**Combination Coil/Hail Guards**
Heavy gauge steel frame painted to match cabinet with expanded metal mesh to protect the outdoor coil from damage.

## CONTROLS

**Unit Control**
All control voltage is provided via a 24V (secondary) transformer with inline fuse protection.

**Heat/Cool Staging**

Capable of up to 1 heat / 2 cool staging with a thermostat.

**Night Setback Mode**

Saves energy by closing outdoor air dampers and operating supply fan on thermostat demand only.

**Smoke Detectors**
*NOTE - Smoke detectors are not available and must be field provided by installer.*

### Options / Accessories

**Field Installed**

**Thermostats**
See Control system and thermostat options.

## 8 BLOWER

A wide selection of supply air blower options are available to meet a variety of air flow requirements.

**Motor**
Overload protected, equipped with ball bearings. Belt drive motors are offered on all models and are available in several different sizes to maximize air performance.

**Supply Air Blower**
Forward curved blades, blower wheel is statically and dynamically balanced.

Equipped with ball bearings and adjustable pulley (allows speed change).

### Required Selections

**Supply Air Blower**
Order blower motor kW and drive kit number required when base unit is ordered, see Drive Kit Specifications Table.

## INDOOR AIR QUALITY

**Air Filters**
Disposable 51 mm filters furnished as standard.

### Options / Accessories

**Field Installed**

**Indoor Air Quality ($CO_2$) Sensor**
Monitors $CO_2$ levels adjusts economizer dampers as needed for Demand Control Ventilation.

## ELECTRICAL

**Marked & Color-Coded Wiring**
All electrical wiring is color-coded and marked to identify which components it is connecting.

**Electrical Plugs**
Positive connection electrical plugs are used to connect common accessories or maintenance parts for easy removal or installation.

### Required Selections

**Voltage Choice**
Specify when ordering base unit.

**Field Installed**

**Electric Heat**
Helix wound nichrome elements, individual element limit controls, wiring harness. See Options / Accessories tables for ordering information.

*NOTE - Unit Fuse Block is required and must be ordered separately. See Electrical/Electric Heat tables for ordering information.*

## ECONOMIZER OPTIONS

### Factory or Field Installed

**Economizer (Downflow or Horizontal)**
**(Standard and High Performance Common Features)**
Outdoor Air Hood is furnished.

Economizer includes Barometric Relief Dampers with Exhaust Hood.

Barometric Relief Dampers allow relief of excess air, aluminum blade dampers prevent blow back and outdoor air infiltration during off cycle, bird screen furnished. Hood is furnished.

Single Sensible Temperature Control is furnished with the economizer

Outdoor air sensor enables Economizer if the outdoor temperature is less than the setpoint of the control.

Demand Control Ventilation (DCV) ready using optional $CO_2$ sensors.

*NOTE - Horizontal Economizer is field installed only.*

**Standard Economizer Features**
Gear-driven action, return air and outdoor air dampers, plug-in connections to unit, neoprene seals, 24-volt, fully-modulating spring return motor.

**Standard Economizer Control Module**
The Standard Economizer Control Module can be adjusted to operate based on outdoor air temperatures.

**Economizer Controls:**

- Damper Minimum Position - Can be set lower than traditional minimum air requirements resulting in cost savings.
- IAQ Sensor - Signals dampers to modulate and maintain 13°C when $CO_2$ is higher than the $CO_2$ setpoint.
- Demand Control Ventilation (DCV) LED - A steady green Demand Control Ventilation LED indicates the IAQ reading is higher than setpoint and requires more fresh air.
- Free Cool LED - A steady green LED indicates outdoor air is suitable for free cooling.

Free Cooling runs when outdoor air temperature is lower than the set temperature on the economizer control.

*NOTE: The Free Cooling default setting for outdoor air temperature sensor is 13°C.*

**High Performance Economizer Features**
Gear-driven action, high torque 24-volt fully-modulating spring return damper motor, return air and outdoor air dampers, plug-in connections to unit, nylon bearings, enhanced neoprene blade edge seals and flexible stainless steel jamb seals to minimize air leakage.

**High Performance Economizer Control Module**
Module provides inputs and outputs to control economizer based on parameter settings.

Module automatically detects sensors by polling to determine which sensors are installed in system.

Module displays any alarm messages (fault detection and diagnostics) as an aid in troubleshooting.

Non-volatile memory retains parameter settings in case of power failure.

Keypad with four navigation buttons and LCD screen is furnished for setting economizer parameters.

- Menu Up/Exit button returns to the main menu.
- Arrow Up ▲ button moves to the previous or next parameter within the selected menu.
- Arrow Down ▼ button moves to the next parameter within the selected menu.
- Select (enter) ↵ button confirms parameter selection.

**Main Menu Structure:**

- STATUS (economizer and system operation status)
- SETPOINTS (settings for various setpoint parameters)
- SYSTEM SETUP (settings/ information about the system)
- ADVANCED SETUP (freeze protection, $CO_2$ settings, stage 3 delay and additional calibration settings)
- CHECKOUT (damper positions)
- ALARMS (output signal that can be configured for remote alarm monitoring)

Refer to Installation Instructions for complete setup information and menu parameters available.

### Field Installed

**Single Enthalpy Temperature Control**
Outdoor air enthalpy sensor enables Economizer if the outdoor enthalpy is less than the setpoint of the control.

## EXHAUST OPTIONS

**Field Installed**

**Power Exhaust Fan - Downflow or Horizontal**
Installs external to unit for applications with Economizer option. Provides exhaust air pressure relief. Interlocked to run when supply air blower is operating, fan runs when outdoor air dampers are 50% open (adjustable), motor is overload protected.

Fan is 305 mm diameter with 5 fan blades 0.25 kW motor.

## OUTDOOR AIR OPTIONS

**Field Installed**

**Outdoor Air Dampers - Downflow**
Linked mechanical dampers, 0 to 35% (fixed) outdoor air adjustable, installs in unit.

Automatic model features fully modulating spring return damper motor with plug-in connection.

Manual model features a slide damper. Maximum mixed air temperature in cooling mode: 38°C.

## ROOF CURBS

**Hybrid Roof Curbs, Downflow**
Nailer strip furnished, mates to unit, US National Roofing Contractors Approved, shipped knocked down.

Roof curb can be assembled using interlocking tabs to fasten corners together. No tools required.

Curb can also be fastened together with furnished hardware.

Available in 203, 356, 457, and 610 mm heights.

**Adaptor Curbs (not shown)**
Curbs are regionally sourced. Dimensions will vary based upon the source. Contact your local sales representative for a detailed cut sheet with applicable dimensions.

## CEILING DIFFUSERS

**Ceiling Diffusers (Flush and Step-Down)**
Aluminum grilles, large center grille, insulated diffuser box with flanges, hanging rings furnished, interior transition (even air flow), internally sealed (prevents recirculation), adapts to T-bar ceiling grids or plaster ceilings.

**Transitions (Supply and Return)**
*NOTE - Ceiling Diffuser Transitions are not furnished and must be field fabricated.*

## OPTIONS / ACCESSORIES

| Item | | Catalog No. | ZCA ZCB 036 | ZCA ZCB 048 | ZCA ZCB 060 | ZCA 072 |
|---|---|---|---|---|---|---|
| **COOLING SYSTEM** | | | | | | |
| Condensate Drain Trap | Polyvinyl Chloride (PVC) - C1TRAP20AD2 | **76W26** | X | X | X | X |
| | Copper - C1TRAP10AD2 | **76W27** | X | X | X | X |
| Drain Pan Overflow Switch | Z1SNSR90A1 | **99W59** | X | X | X | X |
| Low Ambient Kit | Z1SNSR33A-1 | **99W67** | X | X | X | X |
| **BLOWER - SUPPLY AIR** | | | | | | |
| Motors | Belt Drive - 0.62 kW Standard Efficiency | Factory | O | O | | O |
| | Belt Drive - 0.93 kW Standard Efficiency | Factory | O | O | O | O |
| | Belt Drive - 1.24 kW Standard Efficiency | Factory | | | O | O |
| Drive Kits<br>See Blower Data Tables for selection | Kit #ZA07 - 705-1077 rev/min | Factory | O | | | |
| | Kit #ZA08 - 759-1158 rev/min | Factory | | O | | |
| | Kit #ZA09 - 919-1247 rev/min | Factory | | | O | |
| | Kit #ZA10 - 1025-1391 rev/min | Factory | O | | | |
| | [1] Kit #ZA11 - 1111-1437 rev/min | Factory | | O | | |
| | [2] Kit #ZA12 - 1190-1540 rev/min | Factory | | | O | |
| | Kit #ZAA03 - 665-921 rev/min | Factory | | | | O |
| | Kit #ZAA04 - 768-1023 rev/min | Factory | | | | O |
| | Kit #ZAA05 - 921-1177 rev/min | Factory | | | | O |
| **CABINET** | | | | | | |
| Combination Coil/ Hail Guards | ZCA/ZCB036, ZCA/ZCB048, ZCA060 models - Z1GARD52A-1 | **12X19** | X | X | X | |
| | ZCA072 and ZCB060 models - Z1GARD52AT1 | **12X20** | | | X | X |
| Corrosion Protection | | Factory | O | O | O | O |
| **ELECTRICAL** | | | | | | |
| Voltage 50 hz with neutral | 380/420V - 3 phase | Factory | O | O | O | |
| Bottom Power Entry Kit | Z1PEKT01A-1 | **98W08** | X | X | X | X |
| **[3] ELECTRIC HEAT** | | | | | | |
| 3.8 kW | 380/420V-3ph - Z1EH0050AN1G | **99W06** | X | X | X | |
| 5.7 kW | 380/420V-3ph - Z1EH0075AN1G | **99W07** | X | X | X | X |
| 7.7 kW | 380/420V-3ph - Z1EH0100AN1G | **99W08** | X | X | X | X |
| 11.5 kW | 380/420V-3ph - Z1EH0150AN1G | **99W09** | X | X | X | X |
| 17.2 kW | 380/420V-3ph - Z1EH0225AN1G | **99W10** | | X | X | X |
| 23 kW | 380/420V-3ph - Z1EH0300A-1G | **13U02** | | | | X |
| **ELECTRIC HEAT ACCESSORIES** | | | | | | |
| Unit Fuse Block (required) - See Electrical/Electric Heat Tables for Selection | | | X | X | X | X |

[1] Z11 drive kits require the 0.93 kW motor.
[2] Z12 drive kit requires the 1.24 kW motor.
[3] Nominal kW at 420V-3ph-50hz.

NOTE - The catalog and model numbers that appear here are for ordering field installed accessories only.
OX - Field Installed or Configure to Order (factory installed)
O - Configure to Order (Factory Installed)
X - Field Installed.

## OPTIONS / ACCESSORIES

| Item | | Catalog No. | ZCA ZCB 036 | ZCA ZCB 048 | ZCA ZCB 060 | ZCA 072 |
|---|---|---|---|---|---|---|
| **ECONOMIZER** | | | | | | |
| **Standard Economizer With Outdoor Air Hood** | | | | | | |
| Standard Economizer (Downflow)<br>Includes Barometric Relief Dampers and Exhaust Hood | Z1ECON30A-2 | **14D94** | OX | OX | OX | OX |
| Standard Economizer (Horizontal)<br>Includes Barometric Relief Dampers and Exhaust Hood | Z1ECON16A-2 | **14D92** | X | X | X | X |
| **Standard Economizer Controls** | | | | | | |
| Single Enthalpy Control | C1SNSR64FF1 | **53W64** | X | X | X | X |
| **High Performance Economizer With Outdoor Air Hood** | | | | | | |
| High Performance Economizer (Downflow)<br>Includes Barometric Relief Dampers and Exhaust Hood | Z1ECON32A-2 | **14D95** | OX | OX | OX | OX |
| High Performance Economizer (Horizontal)<br>Includes Barometric Relief Dampers and Exhaust Hood | Z1ECON33A-2 | **14D93** | X | X | X | X |
| **High Performance Economizer Controls** | | | | | | |
| Single Enthalpy Control | C1SNSR61FF1 | **11G21** | X | X | X | X |
| **OUTDOOR AIR** | | | | | | |
| **Outdoor Air Dampers With Outdoor Air Hood** | | | | | | |
| Motorized | Z1DAMP21A-1 | **95W74** | X | X | X | X |
| Manual | Z1DAMP11A-1 | **95W73** | X | X | X | X |
| **POWER EXHAUST FAN** | | | | | | |
| Standard Static (Downflow) | 380/420V-3ph - Z1PWRE10A-1G | **23E01** | X | X | X | X |
| Standard Static (Horizontal) | 380/420V-3ph - Z1PWRE15A-1G | **28E01** | X | X | X | X |
| **INDOOR AIR QUALITY** | | | | | | |
| **Indoor Air Quality ($Co_2$) Sensors** | | | | | | |
| Sensor - Wall-mount, off-white plastic cover with LCD display | C0SNSR50AE1L | **77N39** | X | X | X | X |
| Sensor - Wall-mount, black plastic case, no display, rated for plenum mounting | C0SNSR53AE1L | **87N54** | X | X | X | X |
| $CO_2$ Sensor Duct Mounting Kit - for downflow applications | C0MISC19AE1 | **85L43** | X | X | X | X |
| Aspiration Box - for duct mounting non-plenum rated $CO_2$ sensor (**77N39**) | C0MISC16AE1 | **90N43** | X | X | X | X |
| **ROOF CURBS** | | | | | | |
| **Hybrid Roof Curbs, Downflow** | | | | | | |
| 203 mm height | Z1CURB70A-1 | **11F76** | X | X | X | X |
| 356 mm height | Z1CURB71A-1 | **11F77** | X | X | X | X |
| 457 mm height | Z1CURB72A-1 | **11F78** | X | X | X | X |
| 610 mm height | Z1CURB73A-1 | **11F79** | X | X | X | X |
| **CEILING DIFFUSERS** | | | | | | |
| Step-Down - Order one | RTD9-65-R | **27G87** | X | X | X | |
| | RTD11-95 | **29G04** | | | | X |
| Flush - Order one | FD9-65-R | **27G86** | X | X | X | |
| | FD11-95 | **29G08** | | | | X |

NOTE - Ceiling Diffuser Transitions are not furnished and must be field fabricated.

NOTE - The catalog and model numbers that appear here are for ordering field installed accessories only.
OX - Field Installed or Configure to Order (factory installed)
O - Configure to Order (Factory Installed)
X - Field Installed.

## SPECIFICATIONS - ZCA

| General Data | Nominal Size | 10.5 kW (3 Ton) | 14.0 kW (4 Ton) | 17.5 kW (5 Ton) | 21 kW (6 Ton) |
|---|---|---|---|---|---|
| | Model No. | ZCA036S4B | ZCA048S4B | ZCA060S4B | ZCA072S4B |
| | Efficiency Type | Standard | Standard | Standard | Standard |
| Cooling Performance | Gross Cooling Capacity - kW (Btuh) | 9.0 (30 800) | 12.1 (41 200) | 14.9 (50 800) | 17.6 (60 100) |
| | Net Cooling Capacity - kW (Btuh) | [1] 8.6 (29 200) | [1] 11.5 (39 300) | [1] 14.3 (48 800) | [2] 17.1 (58 400) |
| | Rated Air Flow - L/s (cfm) | 565 (1200) | 730 (1550) | 780 (1650) | 955 (2025) |
| | [3] Sound Rating Number (SRN) (dBA) | 77 | 80 | 83 | 84 |
| | Total Unit Power - kW | 2.5 | 3.7 | 4.6 | 5.2 |
| | SEER (Btuh/Watt) | [1] 13.00 | [1] 13.00 | [1] 13.00 | - - - |
| | EER (Btuh/Watt) | [1] 11.50 | [1] 10.60 | [1] 10.70 | [2] 11.20 |
| | [2] IEER (Btuh/Watt) | - - - | - - - | - - - | 12.00 |
| Refrigerant | Type | R-410A | R-410A | R-410A | R-410A |
| | Charge Furnished | 1.8 kg (4 lbs. 1 oz.) | 2.0 kg (4 lbs. 6 oz.) | 2.4 kg (5 lbs. 6 oz.) | 3.18 kg (7 lbs. 0 oz.) |
| Electric Heat Available - See page 8 | | 3.8, 5.7, 7.7, 11.5 kW | 3.8, 5.7, 7.7, 11.5, 17.2 kW | | 5.7, 7.7, 11.5, 17.2, 23 kW |
| Compressor Type (one per unit) | | Scroll | Scroll | Scroll | Scroll |
| Outdoor Coil | Net face area - $m^2$ (sq. ft.). | 1.19 (12.8) | 1.19 (12.8) | 1.41 (15.2) | 1.84 (19.9) |
| | Number of rows | 1 | 1 | 1 | 1 |
| | Fins per meter (in.) | 906 (23) | 906 (23) | 906 (23) | 906 (23) |
| Outdoor Coil Fan | Motor W (HP) | (1) 124 (1/6) | (1) 187 (1/4) | (1) 249 (1/3) | (1) 249 (1/3) |
| | Motor rev/min | 688 | 688 | 896 | 900 |
| | Total motor watts | 160 | 210 | 275 | 290 |
| | Diameter - mm (in.) | (1) 559 (22) | (1) 559 (22) | (1) 559 (22) | (1) 559 (22) |
| | Number of blades | 4 | 4 | 3 | 3 |
| | Total air volume - L/s (cfm) | 1060 (2250) | 1300 (2750) | 1595 (3165) | 1680 (3560) |
| Indoor Coil | Net face area - $m^2$ (sq. ft.) | 0.78 (8.36) | 0.78 (8.36) | 0.78 (8.36) | 1.0 (10.8) |
| | Tube diameter - mm (in.) | 9.5 (3/8) | 9.5 (3/8) | 9.5 (3/8) | 9.5 (3/8) |
| | Number of rows | 2 | 2 | 3 | 3 |
| | Fins per m (in.) | 551 (14) | 551(14) | 551 (14) | 554 (14) |
| | Drain Connection (no. and size) - in. | (1) 1 NPT | (1) 1 NPT | (1) 1 NPT | (1) 1 NPT |
| | Expansion device type | Fixed Orifice | Fixed Orifice | Fixed Orifice | Fixed Orifice |
| [4] Indoor Blower & Drive Selection | Nominal Motor | 0.62 kW (0.83 hp), 0.93 kW (1.25 hp) | 0.62 kW (0.83 hp), 0.93 kW (1.25 hp) | 0.93 kW (1.25 hp), 1.24 kW (1.66 hp) | 0.93 kW (1.25 hp), 1.24 kW (1.66 hp) |
| | Maximum Usable Motor | 0.71 kW (0.95 hp), 1.07 kW (1.43 hp) | 0.71 kW (0.95 hp), 1.07 kW (1.43 hp) | 1.07 kW (1.43 hp), 1.42 kW (1.91 hp) | 1.07 kW (1.43 hp), 1.42 kW (1.91 hp) |
| | Available Drive Kits | Kit #ZA07 705-1077 rev/min<br>Kit #ZA10 1025-1391 rev/min | Kit #ZA08 759-1158 rev/min<br>[5] Kit #ZA11 1111-1437 rev/min | Kit #ZA09 919-1247 rev/min<br>[6] Kit #ZA12 1190-1540 rev/min | Kit #ZAA03 665-921 rev/min<br>Kit #ZAA04 768-1023 rev/min<br>Kit #ZAA05 921-1177 rev/min |
| | Wheel nominal diameter x width - mm (in.) | 254 x 254 (10 x 10) | 254 x 254 (10 x 10) | 254 x 254 (10 x 10) | 381 x 229 (15 x 9) |
| Filters | Type | Disposable | | | |
| | Number and size - mm (in.) | (4) 356 x 508 x 51 (14 x 20 x 2) | | | (2) 406 x 508 x 51 (16 x 20 x 2)<br>(2) 508 x 508 x 51 (20 x 20 x 2) |
| Electrical Characteristics - 50 Hz | | 380/420V - 50 hertz - 3 phase with neutral | | | |

NOTE - Net capacity includes evaporator blower motor heat deduction. Gross capacity does not include evaporator blower motor heat deduction.

[1, 2] Rating test conditions are those included in Air-Conditioning, Heating and Refrigeration Institute (AHRI) Standard [1] 210/240 or [2] 340/360; 35°C (95°F) outdoor air temperature and 27°C (80°F) db/19°C (67°F) wb entering evaporator air; minimum external duct static pressure while operating at rated voltage and air volumes.

[3] Sound Rating Number (SRN) rated in accordance with test conditions included in ANSI/AHRI Standard 270-2008.

[4] Using total air volume and system static pressure requirements determine from blower performance tables rev/min and motor size required. Maximum usable size of motors furnished is shown. If motors of comparable size are used, be sure to keep within the service factor limitations outlined on the motor nameplate.
0.62 kW = 0.83 hp (1.0 nominal hp) while operating at rated voltage and frequency.
0.93 kW = 1.25 hp (1.5 nominal hp) while operating at rated voltage and frequency.
1.24 kW = 1.66 hp (2.0 nominal hp) while operating at rated voltage and frequency.

[5] ZA11 drive kits require the 0.93 kW motor.

[6] ZA12 drive kit requires the 1.24 kW motor.

## SPECIFICATIONS - ZCB

| General Data | Nominal Size | 10.5 kW (3 Ton) | 14.0 kW (4 Ton) | 17.5 kW (5 Ton) |
|---|---|---|---|---|
| | **Model No.** | **ZCB036S4B** | **ZCB048S4B** | **ZCB060S4B** |
| | **Efficiency Type** | **Standard** | **Standard** | **Standard** |
| **Cooling Performance** | Gross Cooling Capacity - kW (Btuh) | 9.2 (31 400) | 12.0 (40 900) | 14.6 (49 900) |
| | [1] Net Cooling Capacity - kW (Btuh) | 8.8 (30 200) | 11.6 (39 700) | 14.2 (48 600) |
| | Rated Air Flow - L/s (cfm) | 560 (1190) | 650 (1380) | 815 (1725) |
| | [2] Sound Rating Number (SRN) (dBA) | 77 | 80 | 78 |
| | Total Unit Power - kW | 2.55 | 3.5 | 4.3 |
| | [1] SEER (Btuh/Watt) | 14.00 | 14.00 | 14.00 |
| | [1] EER (Btuh/Watt) | 11.80 | 11.30 | 11.30 |
| **Refrigerant** | Type | R-410A | R-410A | R-410A |
| | Charge Furnished | 2.32 (5 lbs. 2 oz.) | 2.38 (5 lbs. 4 oz.) | 3.32 (7 lbs. 5 oz.) |
| **Electric Heat Available - See page 8** | | 3.8, 5.7, 7.7, 11.5 kW | 3.8, 5.7, 7.7, 11.5, 17.2 kW | |
| **Compressor Type (one per unit)** | | Scroll | Scroll | Scroll |
| **Outdoor Coil** | Net face area - $m^2$ (sq. ft.). | 1.4 (15.2) | 1.4 (15.2) | 1.84 (19.9) |
| | Number of rows | 1 | 1 | 1 |
| | Fins per meter (in.) | 906 (23) | 906 (23) | 906 (23) |
| **Outdoor Coil Fan** | Motor W (HP) | 187 (1/4) | 187 (1/4) | 187 (1/4) |
| | Motor rev/min | 690 | 690 | 690 |
| | Total motor watts | 260 | 260 | 260 |
| | Diameter - mm (in.) | 559 (22) | 559 (22) | 559 (22) |
| | Number of blades | 4 | 4 | 4 |
| | Total air volume - L/s (cfm) | 3080 | 3080 | 3080 |
| **Indoor Coil** | Net face area - $m^2$ (sq. ft.) | 0.78 (8.4) | 0.78 (8.4) | 1.0 (10.8) |
| | Tube diameter - mm (in.) | 9.5 (3/8) | 9.5 (3/8) | 9.5 (3/8) |
| | Number of rows | 3 | 3 | 3 |
| | Fins per m (in.) | 551 (14) | 551 (14) | 551 (14) |
| | Drain Connection (no. and size) -cm (in.) | (1) 1 NPT | (1) 1 NPT | (1) 1 NPT |
| | Expansion device type | Fixed Orifice | Fixed Orifice | Fixed Orifice |
| [3] **Indoor Blower & Drive Selection** | Nominal Motor kW (hp) | 0.62 (0.83)<br>0.93 (1.25) | 0.62 (0.83)<br>0.93 (1.25) | 0.93 (1.25)<br>1.24 (1.66) |
| | Maximum Usable Motor | 0.71 (0.95)<br>1.07 (1.43) | 0.71 (0.95)<br>1.07 (1.43) | 1.07 (1.43)<br>1.42 (1.91) |
| | Available Drive Kits | Kit #ZA07<br>705-1077 rev/min<br>Kit #ZA10<br>1025-1391 rev/min | Kit #ZA08<br>759-1158 rev/min<br>[4] Kit #ZA11<br>1111-1437 rev/min | Kit #ZA09<br>919-1247 rev/min<br>[5] Kit #ZA12<br>1190-1540 rev/min |
| | Wheel nominal diameter x width - mm (in.) | 254 x 254 (10 x 10) | 254 x 254 (10 x 10) | 254 x 254 (10 x 10) |
| **Filters** | Type | Disposable | | |
| | Number and size - mm (in.) | (4) 356 x 508 x 51 (14 x 20 x 2) | | (2) 406 x 508 x 51 (16 x 20 x 2)<br>(2) 508 x 508 x 51 (20 x 20 x 2) |
| **Electrical Characteristics - 50 Hz** | | 380/420V - 50 hertz - 3 phase with neutral | | |

NOTE - Net capacity includes evaporator blower motor heat deduction. Gross capacity does not include evaporator blower motor heat deduction.

[1] Rating test conditions are those included in Air-Conditioning, Heating and Refrigeration Institute (AHRI) Standard [1] 210/240 or [2] 340/360; 35°C (95°F) outdoor air temperature and 27°C (80°F) db/19°C (67°F) wb entering evaporator air; minimum external duct static pressure while operating at rated voltage and air volumes.

[2] Sound Rating Number (SRN) rated in accordance with test conditions included in ANSI/AHRI Standard 270-2008.

[3] Using total air volume and system static pressure requirements determine from blower performance tables rev/min and motor size required. Maximum usable size of motors furnished is shown. If motors of comparable size are used, be sure to keep within the service factor limitations outlined on the motor nameplate.
0.62 kW = 0.83 hp (1.0 nominal hp) while operating at rated voltage and frequency.
0.93 kW = 1.25 hp (1.5 nominal hp) while operating at rated voltage and frequency.
1.24 kW = 1.66 hp (2.0 nominal hp) while operating at rated voltage and frequency.

[4] ZA11 drive kits require the 0.93 kW motor.

[5] ZA12 drive kit requires the 1.24 kW motor.

## RATINGS - ZCA

NOTE − For Temperatures and Capacities not shown in tables, see bulletin − Cooling Unit Rating Table Correction Factor Data in Miscellaneous Engineering Data section.

### 10.5 kW - ZCA036S4

| Entering Wet Bulb Temperature | Total Air Volume | Outdoor Air Temperature Entering Outdoor Coil | | | | | | | | | | | | | | | | | | | |
|---|---|---|---|---|---|---|---|---|---|---|---|---|---|---|---|---|---|---|---|---|---|
| | | 26.7°C | | | | | 35°C | | | | | 43.3°C | | | | | 51.7°C | | | | |
| | | Total Cool Cap. | Comp. Motor Input | Sensible To Total Ratio (S/T) Dry Bulb | | | Total Cool Cap. | Comp. Motor Input | Sensible To Total Ratio (S/T) Dry Bulb | | | Total Cool Cap. | Comp. Motor Input | Sensible To Total Ratio (S/T) Dry Bulb | | | Total Cool Cap. | Comp. Motor Input | Sensible To Total Ratio (S/T) Dry Bulb | | |
| | L/s | kW | kW | 24°C | 27°C | 29°C | kW | kW | 24°C | 27°C | 29°C | kW | kW | 24°C | 27°C | 29°C | kW | kW | 24°C | 27°C | 29°C |
| 17.2°C | 455 | 8.9 | 1.63 | 0.73 | 0.89 | 1.00 | 7.9 | 2.00 | 0.73 | 0.91 | 1.00 | 6.4 | 2.39 | 0.74 | 0.95 | 1.00 | 4.6 | 2.87 | 0.80 | 1.00 | 1.00 |
| | 565 | 9.6 | 1.64 | 0.79 | 0.96 | 1.00 | 8.4 | 2.00 | 0.80 | 0.99 | 1.00 | 7.0 | 2.40 | 0.83 | 1.00 | 1.00 | 5.1 | 2.88 | 0.93 | 1.00 | 1.00 |
| | 680 | 10.1 | 1.65 | 0.85 | 1.00 | 1.00 | 9.0 | 2.01 | 0.86 | 1.00 | 1.00 | 7.5 | 2.41 | 0.90 | 1.00 | 1.00 | 5.5 | 2.88 | 1.00 | 1.00 | 1.00 |
| 19.4°C | 455 | 9.6 | 1.64 | 0.56 | 0.71 | 0.86 | 8.5 | 2.00 | 0.54 | 0.71 | 0.87 | 7.0 | 2.40 | 0.52 | 0.73 | 0.92 | 4.9 | 2.89 | 0.49 | 0.79 | 1.00 |
| | 565 | 10.2 | 1.65 | 0.60 | 0.77 | 0.94 | 9.0 | 2.01 | 0.59 | 0.78 | 0.96 | 7.4 | 2.41 | 0.58 | 0.81 | 1.00 | 5.3 | 2.88 | 0.58 | 0.91 | 1.00 |
| | 680 | 10.6 | 1.65 | 0.64 | 0.83 | 0.99 | 9.4 | 2.02 | 0.63 | 0.84 | 1.00 | 7.8 | 2.41 | 0.63 | 0.89 | 1.00 | 5.5 | 2.88 | 0.65 | 1.00 | 1.00 |
| 21.7°C | 455 | 10.2 | 1.65 | 0.41 | 0.56 | 0.70 | 9.1 | 2.01 | 0.37 | 0.54 | 0.69 | 7.5 | 2.41 | 0.32 | 0.52 | 0.71 | 5.4 | 2.89 | 0.24 | 0.51 | 0.77 |
| | 565 | 10.8 | 1.66 | 0.43 | 0.60 | 0.76 | 9.6 | 2.02 | 0.40 | 0.59 | 0.76 | 8.0 | 2.41 | 0.36 | 0.58 | 0.80 | 5.7 | 2.89 | 0.29 | 0.60 | 0.89 |
| | 680 | 11.3 | 1.66 | 0.45 | 0.64 | 0.81 | 10.1 | 2.03 | 0.43 | 0.63 | 0.83 | 8.3 | 2.42 | 0.39 | 0.64 | 1.00 | 5.9 | 2.89 | 0.33 | 0.67 | 0.99 |

| Entering Wet Bulb Temperature | Total Air Volume | Outdoor Air Temperature Entering Outdoor Coil | | | | | | | | | | | | | | |
|---|---|---|---|---|---|---|---|---|---|---|---|---|---|---|---|---|
| | | 46°C | | | | | 48°C | | | | | 50°C | | | | |
| | | Total Cool Cap. | Comp. Motor Input | Sensible To Total Ratio (S/T) Dry Bulb | | | Total Cool Cap. | Comp. Motor Input | Sensible To Total Ratio (S/T) Dry Bulb | | | Total Cool Cap. | Comp. Motor Input | Sensible To Total Ratio (S/T) Dry Bulb | | |
| | L/s | kW | kW | 24°C | 27°C | 29°C | kW | kW | 24°C | 27°C | 29°C | kW | kW | 24°C | 27°C | 29°C |
| 17.2°C | 455 | 7.1 | 2.52 | .75 | .98 | 1.00 | 5.4 | 2.61 | 0.77 | 1.00 | 1.00 | 4.9 | 2.71 | 0.79 | 1.00 | 1.00 |
| | 565 | 7.6 | 2.53 | .84 | 1.00 | 1.00 | 5.9 | 2.63 | 0.87 | 1.00 | 1.00 | 5.4 | 2.72 | 0.90 | 1.00 | 1.00 |
| | 680 | 8.0 | 2.54 | .92 | 1.00 | 1.00 | 6.4 | 2.63 | 0.96 | 1.00 | 1.00 | 5.8 | 2.73 | 0.99 | 1.00 | 1.00 |
| 19.4°C | 455 | 7.5 | 2.52 | .50 | .73 | .95 | 5.8 | 2.62 | 0.50 | 0.76 | 0.98 | 5.2 | 2.72 | 0.50 | 0.78 | 1.00 |
| | 565 | 7.8 | 2.53 | .57 | .83 | 1.00 | 6.2 | 2.63 | 0.58 | 0.86 | 1.00 | 5.6 | 2.73 | 0.58 | 0.89 | 1.00 |
| | 680 | 8.0 | 2.54 | .63 | .91 | 1.00 | 6.5 | 2.64 | 0.64 | 0.94 | 1.00 | 5.9 | 2.73 | 0.65 | 0.98 | 1.00 |
| 21.7°C | 455 | 7.9 | 2.53 | .30 | .52 | .72 | 6.3 | 2.63 | 0.28 | 0.52 | 0.74 | 5.7 | 2.73 | 0.26 | 0.52 | 0.76 |
| | 565 | 8.3 | 2.54 | .34 | .58 | .81 | 6.7 | 2.64 | 0.33 | 0.59 | 0.84 | 6.0 | 2.73 | 0.30 | 0.60 | 0.87 |
| | 680 | 8.5 | 2.55 | .37 | .64 | .90 | 6.9 | 2.65 | 0.36 | 0.65 | 0.93 | 6.3 | 2.74 | 0.35 | 0.67 | 0.96 |

### 14.0 KW - ZCA048S4

| Entering Wet Bulb Temperature | Total Air Volume | Outdoor Air Temperature Entering Outdoor Coil | | | | | | | | | | | | | | | | | | | |
|---|---|---|---|---|---|---|---|---|---|---|---|---|---|---|---|---|---|---|---|---|---|
| | | 26.7°C | | | | | 35°C | | | | | 43.3°C | | | | | 51.7°C | | | | |
| | | Total Cool Cap. | Comp. Motor Input | Sensible To Total Ratio (S/T) Dry Bulb | | | Total Cool Cap. | Comp. Motor Input | Sensible To Total Ratio (S/T) Dry Bulb | | | Total Cool Cap. | Comp. Motor Input | Sensible To Total Ratio (S/T) Dry Bulb | | | Total Cool Cap. | Comp. Motor Input | Sensible To Total Ratio (S/T) Dry Bulb | | |
| | L/s | kW | kW | 24°C | 27°C | 29°C | kW | kW | 24°C | 27°C | 29°C | kW | kW | 24°C | 27°C | 29°C | kW | kW | 24°C | 27°C | 29°C |
| 17.2°C | 604 | 12.4 | 2.41 | 0.74 | 0.89 | 1.00 | 10.9 | 2.87 | 0.75 | 0.92 | 1.00 | 9.3 | 3.47 | 0.77 | 0.96 | 1.00 | 7.1 | 4.20 | 0.87 | 1.00 | 1.00 |
| | 755 | 13.2 | 2.40 | 0.80 | 0.96 | 1.00 | 11.6 | 2.88 | 0.82 | 0.99 | 1.00 | 10.0 | 3.48 | 0.85 | 1.00 | 1.00 | 7.4 | 4.21 | 0.99 | 1.00 | 1.00 |
| | 906 | 13.7 | 2.41 | 0.85 | 1.00 | 1.00 | 12.3 | 2.88 | 0.88 | 1.00 | 1.00 | 10.6 | 3.49 | 0.92 | 1.00 | 1.00 | 7.6 | 4.23 | 1.00 | 1.00 | 1.00 |
| 19.4°C | 604 | 13.2 | 2.40 | 0.57 | 0.72 | 0.86 | 11.7 | 2.88 | 0.56 | 0.73 | 0.89 | 10.1 | 3.49 | 0.56 | 0.75 | 0.93 | 7.1 | 4.21 | 0.57 | 0.85 | 1.00 |
| | 755 | 14.1 | 2.40 | 0.61 | 0.78 | 0.93 | 12.5 | 2.89 | 0.61 | 0.80 | 0.96 | 10.6 | 3.49 | 0.61 | 0.83 | 1.00 | 7.4 | 4.23 | 0.66 | 0.98 | 1.00 |
| | 906 | 14.7 | 2.41 | 0.65 | 0.83 | 0.99 | 13.0 | 2.89 | 0.65 | 0.86 | 1.00 | 11.0 | 3.50 | 0.66 | 0.91 | 1.00 | 7.7 | 4.24 | 0.74 | 1.00 | 1.00 |
| 21.7°C | 604 | 14.1 | 2.41 | 0.43 | 0.57 | 0.70 | 12.5 | 2.88 | 0.40 | 0.56 | 0.71 | 10.7 | 3.49 | 0.37 | 0.56 | 0.73 | 7.6 | 4.23 | 0.32 | 0.59 | 0.84 |
| | 755 | 14.9 | 2.41 | 0.45 | 0.61 | 0.76 | 13.3 | 2.88 | 0.42 | 0.61 | 0.78 | 11.3 | 3.50 | 0.40 | 0.61 | 0.82 | 7.9 | 4.24 | 0.37 | 0.67 | 0.97 |
| | 906 | 15.6 | 2.41 | 0.46 | 0.64 | 0.81 | 13.8 | 2.89 | 0.44 | 0.65 | 0.84 | 11.7 | 3.51 | 0.43 | 0.67 | 0.89 | 8.2 | 4.25 | 0.41 | 0.76 | 1.00 |

| Entering Wet Bulb Temperature | Total Air Volume | Outdoor Air Temperature Entering Outdoor Coil | | | | | | | | | | | | | | |
|---|---|---|---|---|---|---|---|---|---|---|---|---|---|---|---|---|
| | | 46°C | | | | | 48°C | | | | | 50°C | | | | |
| | | Total Cool Cap. | Comp. Motor Input | Sensible To Total Ratio (S/T) Dry Bulb | | | Total Cool Cap. | Comp. Motor Input | Sensible To Total Ratio (S/T) Dry Bulb | | | Total Cool Cap. | Comp. Motor Input | Sensible To Total Ratio (S/T) Dry Bulb | | |
| | L/s | kW | kW | 24°C | 27°C | 29°C | kW | kW | 24°C | 27°C | 29°C | kW | kW | 24°C | 27°C | 29°C |
| 17.2°C | 604 | 7.9 | 3.88 | 0.80 | 1.00 | 1.00 | 7.9 | 3.88 | 0.80 | 1.00 | 1.00 | 7.3 | 4.08 | 0.83 | 1.00 | 1.00 |
| | 755 | 8.6 | 3.90 | 0.90 | 1.00 | 1.00 | 8.6 | 3.90 | 0.90 | 1.00 | 1.00 | 7.9 | 4.10 | 0.93 | 1.00 | 1.00 |
| | 906 | 9.2 | 3.91 | 0.98 | 1.00 | 1.00 | 9.2 | 3.91 | 0.98 | 1.00 | 1.00 | 8.4 | 4.10 | 1.00 | 1.00 | 1.00 |
| 19.4°C | 604 | 8.6 | 3.90 | 0.56 | 0.79 | 0.98 | 8.6 | 3.90 | 0.56 | 0.79 | 0.98 | 7.8 | 4.09 | 0.56 | 0.81 | 1.00 |
| | 755 | 9.0 | 3.90 | 0.63 | 0.88 | 1.00 | 9.0 | 3.90 | 0.63 | 0.88 | 1.00 | 8.2 | 4.10 | 0.64 | 0.92 | 1.00 |
| | 906 | 9.3 | 3.91 | 0.69 | 0.97 | 1.00 | 9.3 | 3.91 | 0.69 | 0.97 | 1.00 | 8.4 | 4.11 | 0.71 | 1.00 | 1.00 |
| 21.7°C | 604 | 9.2 | 3.91 | 0.35 | 0.56 | 0.77 | 9.2 | 3.91 | 0.35 | 0.56 | 0.77 | 8.4 | 4.10 | 0.33 | 0.57 | 0.80 |
| | 755 | 9.6 | 3.92 | 0.38 | 0.64 | 0.87 | 9.6 | 3.92 | 0.38 | 0.64 | 0.87 | 8.8 | 4.11 | 0.38 | 0.65 | 0.90 |
| | 906 | 9.9 | 3.92 | 0.42 | 0.70 | 0.95 | 9.9 | 3.92 | 0.42 | 0.70 | 0.95 | 9.1 | 4.12 | 0.41 | 0.73 | 0.99 |

## RATINGS - ZCA

NOTE − For Temperatures and Capacities not shown in tables, see bulletin − Cooling Unit Rating Table Correction Factor Data in Miscellaneous Engineering Data section.

### 17.5 KW - ZCA060S4

| Entering Wet Bulb Temperature | Total Air Volume | Outdoor Air Temperature Entering Outdoor Coil | | | | | | | | | | | | | | | | | | | |
|---|---|---|---|---|---|---|---|---|---|---|---|---|---|---|---|---|---|---|---|---|---|
| | | 26.7°C | | | | | 35°C | | | | | 43.3°C | | | | | 51.7°C | | | | |
| | | Total Cool Cap. | Comp. Motor Input | Sensible To Total Ratio (S/T) Dry Bulb | | | Total Cool Cap. | Comp. Motor Input | Sensible To Total Ratio (S/T) Dry Bulb | | | Total Cool Cap. | Comp. Motor Input | Sensible To Total Ratio (S/T) Dry Bulb | | | Total Cool Cap. | Comp. Motor Input | Sensible To Total Ratio (S/T) Dry Bulb | | |
| | L/s | kW | kW | 24°C | 27°C | 29°C | kW | kW | 24°C | 27°C | 29°C | kW | kW | 24°C | 27°C | 29°C | kW | kW | 24°C | 27°C | 29°C |
| 17.2°C | 755 | 15.0 | 2.87 | 0.76 | 0.92 | 1.00 | 13.3 | 3.42 | 0.79 | 0.96 | 1.00 | 11.6 | 4.10 | 0.82 | 1.00 | 1.00 | 9.7 | 4.99 | 0.90 | 1.00 | 1.00 |
| | 944 | 15.7 | 2.89 | 0.83 | 1.00 | 1.00 | 14.2 | 3.45 | 0.86 | 1.00 | 1.00 | 12.5 | 4.15 | 0.92 | 1.00 | 1.00 | 10.4 | 5.04 | 1.00 | 1.00 | 1.00 |
| | 1133 | 16.6 | 2.91 | 0.89 | 1.00 | 1.00 | 15.0 | 3.47 | 0.94 | 1.00 | 1.00 | 13.1 | 4.18 | 1.00 | 1.00 | 1.00 | 10.9 | 5.08 | 1.00 | 1.00 | 1.00 |
| 19.4°C | 755 | 16.0 | 2.9 | 0.59 | 0.74 | 0.89 | 14.3 | 3.45 | 0.59 | 0.76 | 0.93 | 12.4 | 4.14 | 0.61 | 0.80 | 0.99 | 10.1 | 5.02 | 0.63 | 0.88 | 1.00 |
| | 944 | 16.8 | 2.92 | 0.63 | 0.81 | 0.98 | 15.0 | 3.47 | 0.64 | 0.84 | 1.00 | 12.9 | 4.17 | 0.66 | 0.90 | 1.00 | 10.4 | 5.05 | 0.71 | 0.99 | 1.00 |
| | 1133 | 17.3 | 2.93 | 0.67 | 0.87 | 1.00 | 15.4 | 3.49 | 0.69 | 0.91 | 1.00 | 13.3 | 4.18 | 0.72 | 0.98 | 1.00 | 10.9 | 5.07 | 0.78 | 1.00 | 1.00 |
| 21.7°C | 755 | 17.0 | 2.93 | 0.43 | 0.58 | 0.72 | 15.2 | 3.48 | 0.43 | 0.59 | 0.74 | 13.2 | 4.18 | 0.42 | 0.60 | 0.78 | 10.8 | 5.07 | 0.41 | 0.63 | 0.86 |
| | 944 | 17.8 | 2.95 | 0.45 | 0.62 | 0.78 | 15.9 | 3.51 | 0.45 | 0.64 | 0.82 | 13.8 | 4.21 | 0.44 | 0.66 | 0.87 | 11.3 | 5.10 | 0.44 | 0.71 | 0.97 |
| | 1133 | 18.4 | 2.96 | 0.47 | 0.66 | 0.85 | 16.4 | 3.53 | 0.47 | 0.68 | 0.89 | 14.2 | 4.23 | 0.47 | 0.72 | 0.96 | 11.5 | 5.13 | 0.48 | 0.78 | 1.00 |

| Entering Wet Bulb Temperature | Total Air Volume | Outdoor Air Temperature Entering Outdoor Coil | | | | | | | | | | | | | | |
|---|---|---|---|---|---|---|---|---|---|---|---|---|---|---|---|---|
| | | 46°C | | | | | 48°C | | | | | 50°C | | | | |
| | | Total Cool Cap. | Comp. Motor Input | Sensible To Total Ratio (S/T) Dry Bulb | | | Total Cool Cap. | Comp. Motor Input | Sensible To Total Ratio (S/T) Dry Bulb | | | Total Cool Cap. | Comp. Motor Input | Sensible To Total Ratio (S/T) Dry Bulb | | |
| | L/s | kW | kW | 24°C | 27°C | 29°C | kW | kW | 24°C | 27°C | 29°C | kW | kW | 24°C | 27°C | 29°C |
| 17.2°C | 755 | 11.0 | 4.36 | 0.84 | 1.00 | 1.00 | 10.6 | 4.57 | 0.86 | 1.00 | 1.00 | 10.1 | 4.79 | 0.88 | 1.00 | 1.00 |
| | 944 | 11.9 | 4.40 | 0.94 | 1.00 | 1.00 | 11.4 | 4.62 | 0.96 | 1.00 | 1.00 | 10.8 | 4.84 | 0.99 | 1.00 | 1.00 |
| | 1133 | 12.5 | 4.43 | 1.00 | 1.00 | 1.00 | 11.9 | 4.65 | 1.00 | 1.00 | 1.00 | 11.4 | 4.87 | 1.00 | 1.00 | 1.00 |
| 19.4°C | 755 | 11.7 | 4.40 | 0.61 | .82 | 1.00 | 11.2 | 4.60 | 0.62 | 0.84 | 1.00 | 10.6 | 4.82 | 0.63 | 0.86 | 1.00 |
| | 944 | 12.2 | 4.42 | 0.68 | .92 | 1.00 | 11.6 | 4.63 | 0.69 | 0.94 | 1.00 | 11.0 | 4.85 | 0.70 | 0.97 | 1.00 |
| | 1133 | 12.5 | 4.44 | 0.73 | 1.00 | 1.00 | 12.0 | 4.65 | 0.75 | 1.00 | 1.00 | 11.4 | 4.87 | 0.76 | 1.00 | 1.00 |
| 21.7°C | 755 | 12.5 | 4.44 | 0.41 | .61 | .80 | 11.9 | 4.65 | 0.41 | 0.62 | 0.82 | 11.4 | 4.88 | 0.41 | 0.63 | 0.84 |
| | 944 | 13.0 | 4.46 | 0.44 | .67 | .90 | 12.4 | 4.68 | 0.44 | 0.68 | 0.92 | 11.8 | 4.90 | 0.44 | 0.70 | 0.95 |
| | 1133 | 13.4 | 4.49 | 0.47 | .73 | .98 | 12.7 | 4.70 | 0.47 | 0.75 | 1.00 | 12.1 | 4.92 | 0.47 | 0.77 | 1.00 |

### 22 KW - ZCA072S4

| Entering Wet Bulb Temperature | Total Air Volume | Outdoor Air Temperature Entering Outdoor Coil | | | | | | | | | | | | | | | | | | | |
|---|---|---|---|---|---|---|---|---|---|---|---|---|---|---|---|---|---|---|---|---|---|
| | | 26.7°C | | | | | 35°C | | | | | 43.3°C | | | | | 51.7°C | | | | |
| | | Total Cool Cap. | Comp. Motor Input | Sensible To Total Ratio (S/T) Dry Bulb | | | Total Cool Cap. | Comp. Motor Input | Sensible To Total Ratio (S/T) Dry Bulb | | | Total Cool Cap. | Comp. Motor Input | Sensible To Total Ratio (S/T) Dry Bulb | | | Total Cool Cap. | Comp. Motor Input | Sensible To Total Ratio (S/T) Dry Bulb | | |
| | L/s | kW | kW | 24°C | 27°C | 29°C | kW | kW | 24°C | 27°C | 29°C | kW | kW | 24°C | 27°C | 29°C | kW | kW | 24°C | 27°C | 29°C |
| 17.2°C | 945 | 18.0 | 3.57 | 0.79 | 0.94 | 1.00 | 15.8 | 4.23 | 0.80 | 0.97 | 1.00 | 13.3 | 5.01 | 0.83 | 1.00 | 1.00 | 10.8 | 6.01 | 0.89 | 1.00 | 1.00 |
| | 1135 | 18.8 | 3.60 | 0.84 | 0.99 | 1.00 | 16.6 | 4.26 | 0.86 | 1.00 | 1.00 | 14.3 | 5.06 | 0.9 | 1.00 | 1.00 | 11.6 | 6.05 | 0.96 | 1.00 | 1.00 |
| | 1320 | 19.7 | 3.63 | 0.89 | 1.00 | 1.00 | 17.5 | 4.30 | 0.91 | 1.00 | 1.00 | 15 | 5.10 | 0.96 | 1.00 | 1.00 | 12.2 | 6.08 | 1.00 | 1.00 | 1.00 |
| 19.4°C | 945 | 19.3 | 3.62 | 0.61 | 0.77 | 0.91 | 16.9 | 4.28 | 0.60 | 0.79 | 0.94 | 14.3 | 5.06 | 0.59 | 0.81 | 0.98 | 11.4 | 6.04 | 0.60 | 0.87 | 1.00 |
| | 1135 | 20.0 | 3.64 | 0.64 | 0.82 | 0.97 | 17.6 | 4.31 | 0.64 | 0.85 | 1.00 | 14.9 | 5.09 | 0.65 | 0.88 | 1.00 | 11.8 | 6.07 | 0.67 | 0.95 | 1.00 |
| | 1320 | 20.7 | 3.67 | 0.66 | 0.87 | 1.00 | 18.1 | 4.33 | 0.67 | 0.90 | 1.00 | 15.4 | 5.12 | 0.69 | 0.94 | 1.00 | 12.2 | 6.08 | 0.72 | 1.00 | 1.00 |
| 21.7°C | 945 | 20.5 | 3.66 | 0.44 | 0.60 | 0.75 | 18.1 | 4.33 | 0.42 | 0.60 | 0.76 | 15.4 | 5.12 | 0.39 | 0.60 | 0.79 | 12.3 | 6.09 | 0.34 | 0.61 | 0.85 |
| | 1135 | 21.3 | 3.69 | 0.46 | 0.64 | 0.80 | 18.8 | 4.36 | 0.44 | 0.64 | 0.83 | 15.9 | 5.15 | 0.42 | 0.65 | 0.87 | 12.8 | 6.12 | 0.39 | 0.67 | 0.93 |
| | 1320 | 21.9 | 3.72 | 0.47 | 0.67 | 0.85 | 19.2 | 4.38 | 0.45 | 0.67 | 0.88 | 16.4 | 5.18 | 0.44 | 0.70 | 0.93 | 13.1 | 6.15 | 0.41 | 0.73 | 0.99 |

| Entering Wet Bulb Temperature | Total Air Volume | Outdoor Air Temperature Entering Outdoor Coil | | | | | | | | | | | | | | |
|---|---|---|---|---|---|---|---|---|---|---|---|---|---|---|---|---|
| | | 46°C | | | | | 48°C | | | | | 50°C | | | | |
| | | Total Cool Cap. | Comp. Motor Input | Sensible To Total Ratio (S/T) Dry Bulb | | | Total Cool Cap. | Comp. Motor Input | Sensible To Total Ratio (S/T) Dry Bulb | | | Total Cool Cap. | Comp. Motor Input | Sensible To Total Ratio (S/T) Dry Bulb | | |
| | L/s | kW | kW | 24°C | 27°C | 29°C | kW | kW | 24°C | 27°C | 29°C | kW | kW | 24°C | 27°C | 29°C |
| 17.2°C | 945 | 12.6 | 5.30 | 0.82 | 1.00 | 1.00 | 11.4 | 5.78 | 0.87 | 1.00 | 1.00 | 11.4 | 5.78 | 0.87 | 1.00 | 1.00 |
| | 1135 | 13.5 | 5.34 | 0.90 | 1.00 | 1.00 | 12.2 | 5.83 | 0.95 | 1.00 | 1.00 | 12.2 | 5.83 | 0.95 | 1.00 | 1.00 |
| | 1320 | 14.2 | 5.39 | 0.97 | 1.00 | 1.00 | 12.8 | 5.86 | 1.00 | 1.00 | 1.00 | 12.8 | 5.86 | 1.00 | 1.00 | 1.00 |
| 19.4°C | 945 | 13.5 | 5.35 | 0.58 | 0.80 | 0.99 | 12.0 | 5.82 | 0.59 | 0.85 | 1.00 | 12.0 | 5.82 | 0.59 | 0.85 | 1.00 |
| | 1135 | 14.0 | 5.38 | 0.63 | 0.88 | 1.00 | 12.5 | 5.85 | 0.66 | 0.93 | 1.00 | 12.5 | 5.85 | 0.66 | 0.93 | 1.00 |
| | 1320 | 14.4 | 5.40 | 0.68 | 0.95 | 1.00 | 13.0 | 5.87 | 0.71 | 0.99 | 1.00 | 13.0 | 5.87 | 0.71 | 0.99 | 1.00 |
| 21.7°C | 945 | 14.4 | 5.40 | 0.37 | 0.58 | 0.78 | 12.9 | 5.87 | 0.36 | 0.60 | 0.84 | 12.9 | 5.87 | 0.36 | 0.60 | 0.84 |
| | 1135 | 15.0 | 5.42 | 0.40 | 0.63 | 0.86 | 13.5 | 5.90 | 0.39 | 0.67 | 0.92 | 13.5 | 5.90 | 0.39 | 0.67 | 0.92 |
| | 1320 | 15.4 | 5.46 | 0.42 | 0.69 | 0.93 | 13.8 | 5.93 | 0.42 | 0.73 | 0.98 | 13.8 | 5.93 | 0.42 | 0.73 | 0.98 |

## RATINGS - ZCB

NOTE − For Temperatures and Capacities not shown in tables, see bulletin − Cooling Unit Rating Table Correction Factor Data in Miscellaneous Engineering Data section.

### 10.5 KW - ZCB036S4

| Entering Wet Bulb Temperature | Total Air Volume | Outdoor Air Temperature Entering Outdoor Coil | | | | | | | | | | | | | | | | | | | |
|---|---|---|---|---|---|---|---|---|---|---|---|---|---|---|---|---|---|---|---|---|---|
| | | 26.7°C | | | | | 35°C | | | | | 43.3°C | | | | | 51.7°C | | | | |
| | | Total Cool Cap. | Comp. Motor Input | Sensible To Total Ratio (S/T) Dry Bulb | | | Total Cool Cap. | Comp. Motor Input | Sensible To Total Ratio (S/T) Dry Bulb | | | Total Cool Cap. | Comp. Motor Input | Sensible To Total Ratio (S/T) Dry Bulb | | | Total Cool Cap. | Comp. Motor Input | Sensible To Total Ratio (S/T) Dry Bulb | | |
| | L/s | kW | kW | 24°C | 27°C | 29°C | kW | kW | 24°C | 27°C | 29°C | kW | kW | 24°C | 27°C | 29°C | kW | kW | 24°C | 27°C | 29°C |
| 17.2°C | 455 | 9.1 | 1.62 | 0.73 | 0.89 | 1.00 | 8.30 | 1.92 | 0.75 | 0.94 | 1.00 | 7.40 | 2.29 | 0.79 | 0.99 | 1.00 | 7.70 | 2.77 | 1.00 | 1.00 | 1.00 |
| | 565 | 9.6 | 1.62 | 0.79 | 0.99 | 1.00 | 8.80 | 1.93 | 0.82 | 1.00 | 1.00 | 7.90 | 2.30 | 0.88 | 1.00 | 1.00 | 7.70 | 2.77 | 1.00 | 1.00 | 1.00 |
| | 680 | 10.0 | 1.63 | 0.86 | 1.00 | 1.00 | 9.20 | 1.94 | 0.91 | 1.00 | 1.00 | 8.30 | 2.31 | 0.97 | 1.00 | 1.00 | 7.70 | 2.77 | 1.00 | 1.00 | 1.00 |
| 19.4°C | 455 | 9.6 | 1.63 | 0.57 | 0.71 | 0.85 | 8.80 | 1.93 | 0.58 | 0.73 | 0.90 | 7.90 | 2.30 | 0.60 | 0.77 | 0.96 | 7.70 | 2.77 | 1.00 | 1.00 | 1.00 |
| | 565 | 10.1 | 1.63 | 0.61 | 0.77 | 0.95 | 9.20 | 1.94 | 0.62 | 0.80 | 1.00 | 8.10 | 2.31 | 0.65 | 0.86 | 1.00 | 7.70 | 2.77 | 1.00 | 1.00 | 1.00 |
| | 680 | 10.4 | 1.64 | 0.65 | 0.83 | 1.00 | 9.50 | 1.94 | 0.67 | 0.88 | 1.00 | 8.40 | 2.31 | 0.69 | 0.95 | 1.00 | 7.70 | 2.77 | 1.00 | 1.00 | 1.00 |
| 21.7°C | 455 | 10.2 | 1.64 | 0.43 | 0.56 | 0.69 | 9.30 | 1.94 | 0.43 | 0.57 | 0.71 | 8.30 | 2.31 | 0.43 | 0.59 | 0.74 | 7.70 | 2.77 | 1.00 | 1.00 | 1.00 |
| | 565 | 10.7 | 1.65 | 0.44 | 0.60 | 0.75 | 9.70 | 1.95 | 0.45 | 0.62 | 0.78 | 8.60 | 2.31 | 0.45 | 0.64 | 0.83 | 7.70 | 2.77 | 1.00 | 1.00 | 1.00 |
| | 680 | 11.0 | 1.66 | 0.46 | 0.64 | 0.81 | 10.00 | 1.95 | 0.46 | 0.66 | 0.86 | 8.90 | 2.32 | 0.48 | 0.69 | 1.00 | 7.70 | 2.77 | 1.00 | 1.00 | 1.00 |

| Entering Wet Bulb Temperature | Total Air Volume | Outdoor Air Temperature Entering Outdoor Coil | | | | | | | | | | | | | | |
|---|---|---|---|---|---|---|---|---|---|---|---|---|---|---|---|---|
| | | 46°C | | | | | 48°C | | | | | 50°C | | | | |
| | | Total Cool Cap. | Comp. Motor Input | Sensible To Total Ratio (S/T) Dry Bulb | | | Total Cool Cap. | Comp. Motor Input | Sensible To Total Ratio (S/T) Dry Bulb | | | Total Cool Cap. | Comp. Motor Input | Sensible To Total Ratio (S/T) Dry Bulb | | |
| | L/s | kW | kW | 24°C | 27°C | 29°C | kW | kW | 24°C | 27°C | 29°C | kW | kW | 24°C | 27°C | 29°C |
| 17.2°C | 455 | 7.1 | 2.43 | .84 | 1.00 | 1.00 | 6.9 | 2.54 | .82 | 1.00 | 1.00 | 6.7 | 2.65 | .84 | 1.00 | 1.00 |
| | 565 | 7.6 | 2.44 | .92 | 1.00 | 1.00 | 7.3 | 2.55 | .93 | 1.00 | 1.00 | 7.1 | 2.66 | .95 | 1.00 | 1.00 |
| | 680 | 8.0 | 2.45 | .99 | 1.00 | 1.00 | 7.7 | 2.55 | 1.00 | 1.00 | 1.00 | 7.4 | 2.67 | 1.00 | 1.00 | 1.00 |
| 19.4°C | 455 | 7.5 | 2.44 | .62 | .81 | .98 | 7.2 | 2.54 | .62 | .80 | 1.00 | 6.9 | 2.66 | .62 | .81 | 1.00 |
| | 565 | 7.8 | 2.45 | .68 | .90 | 1.00 | 7.5 | 2.55 | .67 | .90 | 1.00 | 7.2 | 2.66 | .68 | .92 | 1.00 |
| | 680 | 8.0 | 2.45 | .73 | .98 | 1.00 | 7.7 | 2.55 | .72 | .99 | 1.00 | 7.4 | 2.67 | .73 | 1.00 | 1.00 |
| 21.7°C | 455 | 7.9 | 2.45 | .43 | .61 | .78 | 7.7 | 2.55 | .43 | .61 | .78 | 7.4 | 2.66 | .43 | .62 | .79 |
| | 565 | 8.3 | 2.45 | .46 | .67 | .87 | 8.0 | 2.56 | .45 | .66 | .87 | 7.6 | 2.67 | .46 | .68 | .90 |
| | 680 | 8.5 | 2.46 | .48 | .73 | .96 | 8.1 | 2.56 | .48 | .72 | .97 | 7.8 | 2.67 | .49 | .73 | .99 |

### 14.0 KW - ZCB048S4

| Entering Wet Bulb Temperature | Total Air Volume | Outdoor Air Temperature Entering Outdoor Coil | | | | | | | | | | | | | | | | | | | |
|---|---|---|---|---|---|---|---|---|---|---|---|---|---|---|---|---|---|---|---|---|---|
| | | 26.7°C | | | | | 35°C | | | | | 43.3°C | | | | | 51.7°C | | | | |
| | | Total Cool Cap. | Comp. Motor Input | Sensible To Total Ratio (S/T) Dry Bulb | | | Total Cool Cap. | Comp. Motor Input | Sensible To Total Ratio (S/T) Dry Bulb | | | Total Cool Cap. | Comp. Motor Input | Sensible To Total Ratio (S/T) Dry Bulb | | | Total Cool Cap. | Comp. Motor Input | Sensible To Total Ratio (S/T) Dry Bulb | | |
| | L/s | kW | kW | 24°C | 27°C | 29°C | kW | kW | 24°C | 27°C | 29°C | kW | kW | 24°C | 27°C | 29°C | kW | kW | 24°C | 27°C | 29°C |
| 17.2°C | 604 | 11.7 | 2.29 | 0.75 | 0.90 | 1.00 | 11.10 | 2.74 | 0.78 | 0.95 | 1.00 | 10.60 | 3.30 | 0.82 | 1.00 | 1.00 | 10.10 | 4.05 | 0.88 | 1.00 | 1.00 |
| | 755 | 12.1 | 2.30 | 0.79 | 0.99 | 1.00 | 11.60 | 2.75 | 0.84 | 1.00 | 1.00 | 11.10 | 3.33 | 0.90 | 1.00 | 1.00 | 10.40 | 4.08 | 0.97 | 1.00 | 1.00 |
| | 906 | 12.5 | 2.32 | 0.86 | 1.00 | 1.00 | 12.00 | 2.77 | 0.92 | 1.00 | 1.00 | 11.40 | 3.35 | 0.98 | 1.00 | 1.00 | 10.70 | 4.11 | 1.00 | 1.00 | 1.00 |
| 19.4°C | 604 | 12.2 | 2.30 | 0.59 | 0.72 | 0.86 | 11.60 | 2.76 | 0.62 | 0.76 | 0.91 | 11.00 | 3.33 | 0.65 | 0.79 | 0.97 | 10.30 | 4.07 | 0.69 | 0.85 | 1.00 |
| | 755 | 12.6 | 2.32 | 0.62 | 0.78 | 0.96 | 12.00 | 2.77 | 0.65 | 0.81 | 1.00 | 11.30 | 3.34 | 0.69 | 0.87 | 1.00 | 10.60 | 4.09 | 0.74 | 0.95 | 1.00 |
| | 906 | 12.9 | 2.33 | 0.66 | 0.84 | 1.00 | 12.20 | 2.79 | 0.69 | 0.89 | 1.00 | 11.50 | 3.36 | 0.73 | 0.96 | 1.00 | 10.70 | 4.11 | 0.78 | 1.00 | 1.00 |
| 21.7°C | 604 | 12.7 | 2.32 | 0.45 | 0.57 | 0.70 | 12.10 | 2.78 | 0.47 | 0.60 | 0.73 | 11.40 | 3.35 | 0.50 | 0.64 | 0.77 | 10.70 | 4.10 | 0.54 | 0.68 | 0.83 |
| | 755 | 13.2 | 2.34 | 0.46 | 0.61 | 0.75 | 12.50 | 2.80 | 0.49 | 0.64 | 0.79 | 11.80 | 3.38 | 0.52 | 0.68 | 0.85 | 10.90 | 4.13 | 0.55 | 0.73 | 0.93 |
| | 906 | 13.5 | 2.36 | 0.47 | 0.65 | 0.81 | 12.80 | 2.81 | 0.50 | 0.69 | 0.87 | 12.00 | 3.39 | 0.53 | 0.72 | 0.93 | 11.00 | 4.14 | 0.57 | 0.77 | 1.00 |

| Entering Wet Bulb Temperature | Total Air Volume | Outdoor Air Temperature Entering Outdoor Coil | | | | | | | | | | | | | | |
|---|---|---|---|---|---|---|---|---|---|---|---|---|---|---|---|---|
| | | 46°C | | | | | 48°C | | | | | 50°C | | | | |
| | | Total Cool Cap. | Comp. Motor Input | Sensible To Total Ratio (S/T) Dry Bulb | | | Total Cool Cap. | Comp. Motor Input | Sensible To Total Ratio (S/T) Dry Bulb | | | Total Cool Cap. | Comp. Motor Input | Sensible To Total Ratio (S/T) Dry Bulb | | |
| | L/s | kW | kW | 24°C | 27°C | 29°C | kW | kW | 24°C | 27°C | 29°C | kW | kW | 24°C | 27°C | 29°C |
| 17.2°C | 604 | 8.6 | 3.69 | .77 | .98 | 1.00 | 10.3 | 3.69 | .84 | 1.00 | 1.00 | 10.2 | 3.87 | .86 | 1.00 | 1.00 |
| | 755 | 9.3 | 3.71 | .86 | 1.00 | 1.00 | 10.7 | 3.72 | .93 | 1.00 | 1.00 | 10.6 | 3.91 | .95 | 1.00 | 1.00 |
| | 906 | 9.8 | 3.72 | .94 | 1.00 | 1.00 | 11.0 | 3.75 | 1.00 | 1.00 | 1.00 | 10.9 | 3.94 | 1.00 | 1.00 | 1.00 |
| 19.4°C | 604 | 9.3 | 3.71 | .55 | .75 | .95 | 10.6 | 3.71 | .67 | .82 | 1.00 | 10.5 | 3.90 | .69 | .84 | 1.00 |
| | 755 | 9.8 | 3.72 | .61 | .84 | 1.00 | 10.9 | 3.73 | .71 | .91 | 1.00 | 10.7 | 3.92 | .73 | .93 | 1.00 |
| | 906 | 10.1 | 3.72 | .66 | .93 | 1.00 | 11.1 | 3.75 | .76 | .99 | 1.00 | 10.9 | 3.93 | .77 | 1.00 | 1.00 |
| 21.7°C | 604 | 9.9 | 3.73 | .36 | .55 | .74 | 11.0 | 3.75 | .52 | .66 | .80 | 10.8 | 3.93 | .53 | .67 | .81 |
| | 755 | 10.4 | 3.73 | .39 | .61 | .83 | 11.3 | 3.77 | .53 | .70 | .89 | 11.1 | 3.96 | .54 | .72 | .91 |
| | 906 | 10.8 | 3.73 | .42 | .67 | .91 | 11.5 | 3.78 | .55 | .75 | .98 | 11.3 | 3.97 | .56 | .76 | .99 |

NOTE − For Temperatures and Capacities not shown in tables, see bulletin − Cooling Unit Rating Table Correction Factor Data in Miscellaneous Engineering Data section.

## 17.5 KW - ZCB060S4

| Entering Wet Bulb Temperature | Total Air Volume | Outdoor Air Temperature Entering Outdoor Coil | | | | | | | | | | | | | | | | | | | |
|---|---|---|---|---|---|---|---|---|---|---|---|---|---|---|---|---|---|---|---|---|---|
| | | 26.7°C | | | | | 35°C | | | | | 43.3°C | | | | | 51.7°C | | | | |
| | | Total Cool Cap. | Comp. Motor Input | Sensible To Total Ratio (S/T) Dry Bulb | | | Total Cool Cap. | Comp. Motor Input | Sensible To Total Ratio (S/T) Dry Bulb | | | Total Cool Cap. | Comp. Motor Input | Sensible To Total Ratio (S/T) Dry Bulb | | | Total Cool Cap. | Comp. Motor Input | Sensible To Total Ratio (S/T) Dry Bulb | | |
| | L/s | kW | kW | 24°C | 27°C | 29°C | kW | kW | 24°C | 27°C | 29°C | kW | kW | 24°C | 27°C | 29°C | kW | kW | 24°C | 27°C | 29°C |
| 17.2°C | 755 | 14.7 | 2.88 | 0.78 | 0.93 | 1.00 | 12.7 | 3.43 | 0.79 | 0.96 | 1.00 | 10.7 | 4.12 | 0.81 | 0.99 | 1.00 | 8.7 | 5.03 | 0.86 | 1.00 | 1.00 |
| | 945 | 15.5 | 2.89 | 0.86 | 0.99 | 1.00 | 13.7 | 3.44 | 0.87 | 1.00 | 1.00 | 11.8 | 4.16 | 0.9 | 1.00 | 1.00 | 9.6 | 5.09 | 0.96 | 1.00 | 1.00 |
| | 1135 | 16.5 | 2.91 | 0.91 | 1.00 | 1.00 | 14.7 | 3.47 | 0.94 | 1.00 | 1.00 | 12.6 | 4.19 | 0.97 | 1.00 | 1.00 | 10.3 | 5.13 | 1.00 | 1.00 | 1.00 |
| 19.4°C | 755 | 15.9 | 2.9 | 0.6 | 0.76 | 0.91 | 13.9 | 3.45 | 0.59 | 0.77 | 0.93 | 11.7 | 4.16 | 0.57 | 0.79 | 0.97 | 9.3 | 5.07 | 0.56 | 0.84 | 1.00 |
| | 945 | 16.7 | 2.91 | 0.64 | 0.83 | 0.97 | 14.6 | 3.46 | 0.64 | 0.86 | 1.00 | 12.4 | 4.18 | 0.64 | 0.89 | 1.00 | 9.8 | 5.10 | 0.65 | 0.94 | 1.00 |
| | 1135 | 17.4 | 2.92 | 0.69 | 0.89 | 1.00 | 15.1 | 3.47 | 0.69 | 0.92 | 1.00 | 12.9 | 4.20 | 0.71 | 0.96 | 1.00 | 10.3 | 5.13 | 0.73 | 1.00 | 1.00 |
| 21.7°C | 755 | 17.0 | 2.91 | 0.43 | 0.59 | 0.74 | 15.0 | 3.48 | 0.41 | 0.58 | 0.75 | 12.7 | 4.19 | 0.36 | 0.57 | 0.77 | 10.2 | 5.12 | 0.32 | 0.57 | 0.81 |
| | 945 | 17.9 | 2.93 | 0.45 | 0.64 | 0.81 | 15.8 | 3.49 | 0.43 | 0.63 | 0.83 | 13.5 | 4.22 | 0.4 | 0.65 | 0.87 | 10.8 | 5.16 | 0.36 | 0.66 | 0.92 |
| | 1135 | 18.6 | 2.95 | 0.48 | 0.69 | 0.88 | 16.3 | 3.51 | 0.46 | 0.69 | 0.90 | 13.9 | 4.25 | 0.44 | 0.71 | 0.94 | 11.2 | 5.19 | 0.41 | 0.75 | 1.00 |

| Entering Wet Bulb Temperature | Total Air Volume | Outdoor Air Temperature Entering Outdoor Coil | | | | | | | | | | | | | | |
|---|---|---|---|---|---|---|---|---|---|---|---|---|---|---|---|---|
| | | 46°C | | | | | 48°C | | | | | 50°C | | | | |
| | | Total Cool Cap. | Comp. Motor Input | Sensible To Total Ratio (S/T) Dry Bulb | | | Total Cool Cap. | Comp. Motor Input | Sensible To Total Ratio (S/T) Dry Bulb | | | Total Cool Cap. | Comp. Motor Input | Sensible To Total Ratio (S/T) Dry Bulb | | |
| | L/s | kW | kW | 24°C | 27°C | 29°C | kW | kW | 24°C | 27°C | 29°C | kW | kW | 24°C | 27°C | 29°C |
| 17.2°C | 755 | 11.0 | 4.36 | 0.84 | 1.00 | 1.00 | 9.6 | 4.59 | .83 | 1.00 | 1.00 | 9.1 | 4.82 | .85 | 1.00 | 1.00 |
| | 945 | 11.9 | 4.40 | 0.94 | 1.00 | 1.00 | 10.6 | 4.64 | .93 | 1.00 | 1.00 | 10.1 | 4.88 | .94 | 1.00 | 1.00 |
| | 1135 | 12.5 | 4.43 | 1.00 | 1.00 | 1.00 | 11.3 | 4.68 | 1.00 | 1.00 | 1.00 | 10.8 | 4.91 | 1.00 | 1.00 | 1.00 |
| 19.4°C | 755 | 11.7 | 4.40 | 0.61 | .82 | 1.00 | 10.4 | 4.63 | .57 | .81 | .99 | 9.8 | 4.86 | .57 | .82 | 1.00 |
| | 945 | 12.2 | 4.42 | 0.68 | .92 | 1.00 | 11.0 | 4.66 | .64 | .92 | 1.00 | 10.4 | 4.89 | .65 | .93 | 1.00 |
| | 1135 | 12.5 | 4.44 | 0.73 | 1.00 | 1.00 | 11.4 | 4.69 | .72 | .99 | 1.00 | 10.8 | 4.92 | .73 | 1.00 | 1.00 |
| 21.7°C | 755 | 12.5 | 4.44 | 0.41 | .61 | .80 | 11.4 | 4.68 | .33 | .57 | .79 | 10.8 | 4.91 | .32 | .57 | .80 |
| | 945 | 13.0 | 4.46 | 0.44 | .67 | .90 | 12.0 | 4.71 | .38 | .65 | .90 | 11.3 | 4.94 | .37 | .65 | .91 |
| | 1135 | 13.4 | 4.49 | 0.47 | .73 | .98 | 12.4 | 4.74 | .42 | .73 | .97 | 11.8 | 4.98 | .41 | .73 | .98 |

## BLOWER DATA - BELT DRIVE - ZCA036 - DOWNFLOW

**BLOWER TABLE INCLUDES RESISTANCE FOR BASE UNIT ONLY WITH DRY INDOOR COIL AND AIR FILTERS IN PLACE.**
**FOR ALL UNITS ADD:**

1 - Any factory installed options air resistance (heat section, economizer, wet coil, etc.).
2 - Any field installed accessories air resistance (duct resistance, diffuser, etc.).
See page 30 for blower motors and drives and wet coil and options/accessory air resistance data.

| Air Volume | | External Static - Pa (in. w.g.) | | | | | | | | | | | | | | | | | | | | | | | |
|---|---|---|---|---|---|---|---|---|---|---|---|---|---|---|---|---|---|---|---|---|---|---|---|---|---|
| | | 25 (0.10) | | | 50 (0.20) | | | 75 (0.30) | | | 100 (0.40) | | | 125 (0.50) | | | 150 (0.60) | | | 175 (0.70) | | | 200 (0.80) | | |
| L/s | cfm | Rev/ min | kW | BHP | Rev/ min | kW | BHP | Rev/ min | kW | BHP | Rev/ min | kW | BHP | Rev/ min | kW | BHP | Rev/ min | kW | BHP | Rev/ min | kW | BHP | Rev/ min | kW | BHP |
| | | Field Furnished | | | | | | | | | Kit ZA07 | | | | | | | | | | | | | | |
| 425 | 900 | 555 | 0.12 | 0.16 | 621 | 0.13 | 0.17 | 691 | 0.14 | 0.19 | 763 | 0.15 | 0.20 | 832 | 0.16 | 0.22 | 897 | 0.18 | 0.24 | 956 | 0.19 | 0.26 | 1010 | 0.22 | 0.29 |
| 472 | 1000 | 577 | 0.13 | 0.18 | 644 | 0.14 | 0.19 | 715 | 0.16 | 0.21 | 786 | 0.17 | 0.23 | 855 | 0.18 | 0.24 | 919 | 0.20 | 0.27 | 976 | 0.22 | 0.29 | 1028 | 0.24 | 0.32 |
| 519 | 1100 | 601 | 0.15 | 0.20 | 670 | 0.16 | 0.22 | 741 | 0.17 | 0.23 | 812 | 0.19 | 0.25 | 879 | 0.21 | 0.28 | 941 | 0.22 | 0.30 | 996 | 0.25 | 0.33 | 1047 | 0.28 | 0.37 |
| 566 | 1200 | 629 | 0.16 | 0.22 | 698 | 0.18 | 0.24 | 770 | 0.19 | 0.26 | 840 | 0.21 | 0.28 | 905 | 0.23 | 0.31 | 965 | 0.25 | 0.34 | 1018 | 0.28 | 0.38 | 1066 | 0.31 | 0.41 |
| 613 | 1300 | 659 | 0.19 | 0.25 | 729 | 0.20 | 0.27 | 800 | 0.22 | 0.30 | 869 | 0.24 | 0.32 | 932 | 0.26 | 0.35 | 989 | 0.29 | 0.39 | 1040 | 0.32 | 0.43 | 1087 | 0.35 | 0.47 |
| 661 | 1400 | 692 | 0.21 | 0.28 | 763 | 0.23 | 0.31 | 833 | 0.25 | 0.34 | 899 | 0.28 | 0.37 | 960 | 0.30 | 0.40 | 1014 | 0.33 | 0.44 | 1063 | 0.36 | 0.48 | 1108 | 0.39 | 0.52 |
| 708 | 1500 | 728 | 0.24 | 0.32 | 798 | 0.26 | 0.35 | 866 | 0.28 | 0.38 | 930 | 0.31 | 0.41 | 987 | 0.34 | 0.45 | 1039 | 0.37 | 0.50 | 1086 | 0.40 | 0.54 | 1130 | 0.43 | 0.58 |

| Air Volume | | External Static - Pa (in. w.g.) | | | | | | | | | | | | | | | | | | | | | | | |
|---|---|---|---|---|---|---|---|---|---|---|---|---|---|---|---|---|---|---|---|---|---|---|---|---|---|
| | | 225 (0.90) | | | 250 (1.00) | | | 275 (1.10) | | | 300 (1.20) | | | 325 (1.30) | | | 350 (1.40) | | | 375 (1.50) | | | 400 (1.60) | | |
| L/s | cfm | Rev/ min | kW | BHP | Rev/ min | kW | BHP | Rev/ min | kW | BHP | Rev/ min | kW | BHP | Rev/ min | kW | BHP | Rev/ min | kW | BHP | Rev/ min | kW | BHP | Rev/ min | kW | BHP |
| | | Kit ZA07 | | | Kit ZA10 | | | | | | | | | | | | | | | | | | | | |
| 425 | 900 | 1060 | 0.23 | 0.31 | 1108 | 0.25 | 0.34 | 1154 | 0.28 | 0.37 | 1197 | 0.30 | 0.40 | 1239 | 0.33 | 0.44 | 1279 | 0.35 | 0.47 | 1319 | 0.38 | 0.51 | 1359 | 0.41 | 0.55 |
| 472 | 1000 | 1077 | 0.26 | 0.35 | 1123 | 0.28 | 0.38 | 1168 | 0.31 | 0.42 | 1211 | 0.34 | 0.45 | 1252 | 0.37 | 0.49 | 1291 | 0.39 | 0.52 | 1330 | 0.42 | 0.56 | 1370 | 0.45 | 0.60 |
| 519 | 1100 | 1094 | 0.30 | 0.40 | 1139 | 0.32 | 0.43 | 1183 | 0.34 | 0.46 | 1225 | 0.37 | 0.50 | 1266 | 0.40 | 0.54 | 1305 | 0.43 | 0.58 | 1343 | 0.46 | 0.62 | 1382 | 0.49 | 0.66 |
| 566 | 1200 | 1112 | 0.34 | 0.45 | 1156 | 0.36 | 0.48 | 1199 | 0.39 | 0.52 | 1241 | 0.41 | 0.55 | 1281 | 0.44 | 0.59 | 1319 | 0.48 | 0.64 | 1357 | 0.51 | 0.68 | 1394 | 0.54 | 0.72 |
| 613 | 1300 | 1131 | 0.37 | 0.50 | 1174 | 0.40 | 0.54 | 1216 | 0.43 | 0.57 | 1257 | 0.46 | 0.61 | 1296 | 0.49 | 0.66 | 1334 | 0.52 | 0.70 | 1371 | 0.55 | 0.74 | 1408 | 0.58 | 0.78 |
| 661 | 1400 | 1151 | 0.42 | 0.56 | 1193 | 0.45 | 0.60 | 1234 | 0.48 | 0.64 | 1274 | 0.51 | 0.68 | 1313 | 0.54 | 0.72 | 1351 | 0.57 | 0.77 | 1387 | 0.60 | 0.81 | 1423 | 0.64 | 0.86 |
| 708 | 1500 | 1172 | 0.46 | 0.62 | 1213 | 0.49 | 0.66 | 1253 | 0.53 | 0.71 | 1293 | 0.56 | 0.75 | 1331 | 0.59 | 0.79 | 1368 | 0.63 | 0.84 | 1404 | 0.66 | 0.89 | 1440 | 0.69 | 0.93 |

## BLOWER DATA - BELT DRIVE - ZCA036 - HORIZONTAL

**BLOWER TABLE INCLUDES RESISTANCE FOR BASE UNIT ONLY WITH DRY INDOOR COIL AND AIR FILTERS IN PLACE.**
**FOR ALL UNITS ADD:**

1 - Any factory installed options air resistance (heat section, economizer, wet coil, etc.).
2 - Any field installed accessories air resistance (duct resistance, diffuser, etc.).
See page 30 for blower motors and drives and wet coil and options/accessory air resistance data.

| Air Volume | | External Static - Pa (in. w.g.) | | | | | | | | | | | | | | | | | | | | | | | |
|---|---|---|---|---|---|---|---|---|---|---|---|---|---|---|---|---|---|---|---|---|---|---|---|---|---|
| | | 25 (0.10) | | | 50 (0.20) | | | 75 (0.30) | | | 100 (0.40) | | | 125 (0.50) | | | 150 (0.60) | | | 175 (0.70) | | | 200 (0.80) | | |
| L/s | cfm | Rev/ min | kW | BHP | Rev/ min | kW | BHP | Rev/ min | kW | BHP | Rev/ min | kW | BHP | Rev/ min | kW | BHP | Rev/ min | kW | BHP | Rev/ min | kW | BHP | Rev/ min | kW | BHP |
| | | Field Furnished | | | | | | Kit ZA07 | | | | | | | | | | | | | | | | | |
| 425 | 900 | 572 | 0.10 | 0.14 | 641 | 0.12 | 0.16 | 712 | 0.14 | 0.19 | 785 | 0.16 | 0.22 | 860 | 0.18 | 0.24 | 931 | 0.20 | 0.27 | 991 | 0.22 | 0.29 | 1039 | 0.24 | 0.32 |
| 472 | 1000 | 602 | 0.12 | 0.16 | 671 | 0.14 | 0.19 | 742 | 0.16 | 0.22 | 815 | 0.18 | 0.24 | 887 | 0.20 | 0.27 | 954 | 0.22 | 0.30 | 1010 | 0.25 | 0.33 | 1055 | 0.27 | 0.36 |
| 519 | 1100 | 636 | 0.14 | 0.19 | 706 | 0.16 | 0.22 | 776 | 0.19 | 0.25 | 847 | 0.21 | 0.28 | 916 | 0.23 | 0.31 | 977 | 0.25 | 0.34 | 1028 | 0.28 | 0.37 | 1070 | 0.31 | 0.41 |
| 566 | 1200 | 674 | 0.17 | 0.23 | 744 | 0.19 | 0.26 | 813 | 0.22 | 0.29 | 881 | 0.24 | 0.32 | 944 | 0.26 | 0.35 | 999 | 0.28 | 0.38 | 1045 | 0.31 | 0.42 | 1087 | 0.34 | 0.45 |
| 613 | 1300 | 716 | 0.19 | 0.26 | 784 | 0.22 | 0.29 | 851 | 0.25 | 0.33 | 914 | 0.27 | 0.36 | 971 | 0.30 | 0.40 | 1020 | 0.32 | 0.43 | 1064 | 0.35 | 0.47 | 1106 | 0.37 | 0.50 |
| 661 | 1400 | 759 | 0.22 | 0.30 | 824 | 0.25 | 0.34 | 888 | 0.28 | 0.37 | 946 | 0.31 | 0.41 | 998 | 0.34 | 0.45 | 1043 | 0.37 | 0.49 | 1086 | 0.39 | 0.52 | 1129 | 0.41 | 0.55 |
| 708 | 1500 | 803 | 0.26 | 0.35 | 865 | 0.29 | 0.39 | 925 | 0.32 | 0.43 | 979 | 0.35 | 0.47 | 1027 | 0.39 | 0.52 | 1070 | 0.41 | 0.55 | 1113 | 0.43 | 0.58 | 1156 | 0.46 | 0.61 |

| Air Volume | | External Static - Pa (in. w.g.) | | | | | | | | | | | | | | | | | | | | | | | |
|---|---|---|---|---|---|---|---|---|---|---|---|---|---|---|---|---|---|---|---|---|---|---|---|---|---|
| | | 225 (0.90) | | | 250 (1.00) | | | 275 (1.10) | | | 300 (1.20) | | | 325 (1.30) | | | 350 (1.40) | | | 375 (1.50) | | | 400 (1.60) | | |
| L/s | cfm | Rev/ min | kW | BHP | Rev/ min | kW | BHP | Rev/ min | kW | BHP | Rev/ min | kW | BHP | Rev/ min | kW | BHP | Rev/ min | kW | BHP | Rev/ min | kW | BHP | Rev/ min | kW | BHP |
| | | Kit ZA10 | | | | | | | | | | | | | | | | | | | | | | | |
| 425 | 900 | 1085 | 0.26 | 0.35 | 1135 | 0.28 | 0.38 | 1183 | 0.30 | 0.40 | 1227 | 0.31 | 0.42 | 1268 | 0.34 | 0.45 | 1305 | 0.37 | 0.49 | 1342 | 0.40 | 0.53 | 1379 | 0.43 | 0.57 |
| 472 | 1000 | 1099 | 0.29 | 0.39 | 1148 | 0.31 | 0.42 | 1195 | 0.33 | 0.44 | 1239 | 0.35 | 0.47 | 1279 | 0.37 | 0.50 | 1316 | 0.40 | 0.54 | 1352 | 0.43 | 0.58 | 1389 | 0.46 | 0.62 |
| 519 | 1100 | 1114 | 0.33 | 0.44 | 1163 | 0.34 | 0.46 | 1210 | 0.37 | 0.49 | 1253 | 0.39 | 0.52 | 1292 | 0.41 | 0.55 | 1329 | 0.44 | 0.59 | 1364 | 0.48 | 0.64 | 1401 | 0.51 | 0.68 |
| 566 | 1200 | 1131 | 0.36 | 0.48 | 1180 | 0.38 | 0.51 | 1226 | 0.40 | 0.54 | 1269 | 0.43 | 0.57 | 1308 | 0.46 | 0.61 | 1343 | 0.49 | 0.66 | 1378 | 0.52 | 0.70 | 1414 | 0.56 | 0.75 |
| 613 | 1300 | 1151 | 0.40 | 0.53 | 1199 | 0.42 | 0.56 | 1245 | 0.44 | 0.59 | 1287 | 0.47 | 0.63 | 1324 | 0.51 | 0.68 | 1359 | 0.54 | 0.72 | 1394 | 0.57 | 0.77 | 1429 | 0.61 | 0.82 |
| 661 | 1400 | 1175 | 0.43 | 0.58 | 1222 | 0.46 | 0.62 | 1266 | 0.49 | 0.66 | 1306 | 0.52 | 0.70 | 1342 | 0.56 | 0.75 | 1376 | 0.60 | 0.80 | 1410 | 0.63 | 0.85 | 1446 | 0.66 | 0.89 |
| 708 | 1500 | 1201 | 0.48 | 0.65 | 1246 | 0.51 | 0.68 | 1289 | 0.54 | 0.73 | 1327 | 0.58 | 0.78 | 1362 | 0.62 | 0.83 | 1395 | 0.66 | 0.88 | 1429 | 0.69 | 0.93 | 1464 | 0.73 | 0.98 |

## BLOWER DATA - BELT DRIVE - ZCA048 - DOWNFLOW

**BLOWER TABLE INCLUDES RESISTANCE FOR BASE UNIT ONLY WITH DRY INDOOR COIL AND AIR FILTERS IN PLACE.**
**FOR ALL UNITS ADD:**

1 - Any factory installed options air resistance (heat section, economizer, wet coil, etc.).
2 - Any field installed accessories air resistance (duct resistance, diffuser, etc.).
See page 30 for blower motors and drives and wet coil and options/accessory air resistance data.

| Air Volume | | External Static - Pa (in. w.g.) | | | | | | | | | | | | | | | | | | | | | | | |
|---|---|---|---|---|---|---|---|---|---|---|---|---|---|---|---|---|---|---|---|---|---|---|---|---|---|
| | | 25 (0.10) | | | 50 (0.20) | | | 75 (0.30) | | | 100 (0.40) | | | 125 (0.50) | | | 150 (0.60) | | | 175 (0.70) | | | 200 (0.80) | | |
| L/s | cfm | Rev/ min | kW | BHP | Rev/ min | kW | BHP | Rev/ min | kW | BHP | Rev/ min | kW | BHP | Rev/ min | kW | BHP | Rev/ min | kW | BHP | Rev/ min | kW | BHP | Rev/ min | kW | BHP |
| | | Field Furnished | | | | | | Kit ZA08 | | | | | | | | | | | | | | | | | |
| 566 | 1200 | 629 | 0.16 | 0.22 | 698 | 0.18 | 0.24 | 770 | 0.19 | 0.26 | 840 | 0.21 | 0.28 | 905 | 0.23 | 0.31 | 965 | 0.25 | 0.34 | 1018 | 0.28 | 0.38 | 1066 | 0.31 | 0.41 |
| 613 | 1300 | 659 | 0.19 | 0.25 | 729 | 0.20 | 0.27 | 800 | 0.22 | 0.30 | 869 | 0.24 | 0.32 | 932 | 0.26 | 0.35 | 989 | 0.29 | 0.39 | 1040 | 0.32 | 0.43 | 1087 | 0.35 | 0.47 |
| 661 | 1400 | 692 | 0.21 | 0.28 | 763 | 0.23 | 0.31 | 833 | 0.25 | 0.34 | 899 | 0.28 | 0.37 | 960 | 0.30 | 0.40 | 1014 | 0.33 | 0.44 | 1063 | 0.36 | 0.48 | 1108 | 0.39 | 0.52 |
| 708 | 1500 | 728 | 0.24 | 0.32 | 798 | 0.26 | 0.35 | 866 | 0.28 | 0.38 | 930 | 0.31 | 0.41 | 987 | 0.34 | 0.45 | 1039 | 0.37 | 0.50 | 1086 | 0.40 | 0.54 | 1130 | 0.43 | 0.58 |
| 755 | 1600 | 766 | 0.28 | 0.37 | 835 | 0.30 | 0.40 | 900 | 0.32 | 0.43 | 960 | 0.35 | 0.47 | 1015 | 0.38 | 0.51 | 1065 | 0.41 | 0.55 | 1110 | 0.45 | 0.60 | 1152 | 0.48 | 0.65 |
| 802 | 1700 | 806 | 0.31 | 0.42 | 871 | 0.34 | 0.45 | 934 | 0.36 | 0.48 | 991 | 0.39 | 0.52 | 1043 | 0.42 | 0.56 | 1091 | 0.46 | 0.61 | 1134 | 0.49 | 0.66 | 1176 | 0.53 | 0.71 |
| 849 | 1800 | 845 | 0.35 | 0.47 | 908 | 0.37 | 0.50 | 967 | 0.40 | 0.54 | 1021 | 0.43 | 0.58 | 1071 | 0.47 | 0.63 | 1117 | 0.51 | 0.68 | 1159 | 0.54 | 0.73 | 1200 | 0.58 | 0.78 |
| 897 | 1900 | 884 | 0.40 | 0.53 | 944 | 0.42 | 0.56 | 1000 | 0.45 | 0.60 | 1051 | 0.48 | 0.64 | 1099 | 0.51 | 0.69 | 1143 | 0.56 | 0.75 | 1185 | 0.60 | 0.80 | 1225 | 0.64 | 0.86 |
| 944 | 2000 | 923 | 0.44 | 0.59 | 979 | 0.47 | 0.63 | 1032 | 0.50 | 0.67 | 1082 | 0.54 | 0.72 | 1128 | 0.57 | 0.77 | 1171 | 0.62 | 0.83 | 1211 | 0.66 | 0.89 | 1251 | 0.71 | 0.95 |

| Air Volume | | External Static - Pa (in. w.g.) | | | | | | | | | | | | | | | | | | | | | | | |
|---|---|---|---|---|---|---|---|---|---|---|---|---|---|---|---|---|---|---|---|---|---|---|---|---|---|
| | | 225 (0.90) | | | 250 (1.00) | | | 275 (1.10) | | | 300 (1.20) | | | 325 (1.30) | | | 350 (1.40) | | | 375 (1.50) | | | 400 (1.60) | | |
| L/s | cfm | Rev/ min | kW | BHP | Rev/ min | kW | BHP | Rev/ min | kW | BHP | Rev/ min | kW | BHP | Rev/ min | kW | BHP | Rev/ min | kW | BHP | Rev/ min | kW | BHP | Rev/ min | kW | BHP |
| | | Kit ZA08 | | | | | | Kit ZA11 | | | | | | | | | | | | | | | | | |
| 566 | 1200 | 1112 | 0.34 | 0.45 | 1156 | 0.36 | 0.48 | 1199 | 0.39 | 0.52 | 1241 | 0.41 | 0.55 | 1281 | 0.44 | 0.59 | 1319 | 0.48 | 0.64 | 1357 | 0.51 | 0.68 | 1394 | 0.54 | 0.72 |
| 613 | 1300 | 1131 | 0.37 | 0.50 | 1174 | 0.40 | 0.54 | 1216 | 0.43 | 0.57 | 1257 | 0.46 | 0.61 | 1296 | 0.49 | 0.66 | 1334 | 0.52 | 0.70 | 1371 | 0.55 | 0.74 | 1408 | 0.58 | 0.78 |
| 661 | 1400 | 1151 | 0.42 | 0.56 | 1193 | 0.45 | 0.6 | 1234 | 0.48 | 0.64 | 1274 | 0.51 | 0.68 | 1313 | 0.54 | 0.72 | 1351 | 0.57 | 0.77 | 1387 | 0.60 | 0.81 | 1423 | 0.64 | 0.86 |
| 708 | 1500 | 1172 | 0.46 | 0.62 | 1213 | 0.49 | 0.66 | 1253 | 0.53 | 0.71 | 1293 | 0.56 | 0.75 | 1331 | 0.59 | 0.79 | 1368 | 0.63 | 0.84 | 1404 | 0.66 | 0.89 | 1440 | 0.69 | 0.93 |
| 755 | 1600 | 1193 | 0.51 | 0.69 | 1234 | 0.54 | 0.73 | 1273 | 0.58 | 0.78 | 1313 | 0.61 | 0.82 | 1350 | 0.65 | 0.87 | 1387 | 0.69 | 0.92 | 1422 | 0.72 | 0.97 | 1457 | 0.75 | 1.01 |
| 802 | 1700 | 1216 | 0.57 | 0.76 | 1255 | 0.60 | 0.81 | 1295 | 0.64 | 0.86 | 1333 | 0.67 | 0.90 | 1370 | 0.71 | 0.95 | 1406 | 0.75 | 1.00 | 1441 | 0.78 | 1.05 | 1475 | 0.82 | 1.10 |
| 849 | 1800 | 1239 | 0.63 | 0.84 | 1279 | 0.66 | 0.89 | 1317 | 0.70 | 0.94 | 1355 | 0.74 | 0.99 | 1391 | 0.78 | 1.04 | 1426 | 0.81 | 1.09 | 1461 | 0.85 | 1.14 | 1494 | 0.89 | 1.19 |
| 897 | 1900 | 1264 | 0.69 | 0.92 | 1303 | 0.73 | 0.98 | 1341 | 0.77 | 1.03 | 1378 | 0.81 | 1.08 | 1413 | 0.85 | 1.14 | 1448 | 0.89 | 1.19 | 1481 | 0.93 | 1.24 | 1514 | 0.96 | 1.29 |
| 944 | 2000 | 1290 | 0.75 | 1.01 | 1328 | 0.80 | 1.07 | 1366 | 0.84 | 1.13 | 1402 | 0.89 | 1.19 | 1436 | 0.93 | 1.24 | 1470 | 0.96 | 1.29 | 1503 | 1.01 | 1.35 | 1535 | 1.04 | 1.40 |

## BLOWER DATA - BELT DRIVE - ZCA048 - HORIZONTAL

**BLOWER TABLE INCLUDES RESISTANCE FOR BASE UNIT ONLY WITH DRY INDOOR COIL AND AIR FILTERS IN PLACE.**
**FOR ALL UNITS ADD:**

1 - Any factory installed options air resistance (heat section, economizer, wet coil, etc.).
2 - Any field installed accessories air resistance (duct resistance, diffuser, etc.).
See page 30 for blower motors and drives and wet coil and options/accessory air resistance data.

| Air Volume | | External Static - Pa (in. w.g.) | | | | | | | | | | | | | | | | | | | | | | | |
|---|---|---|---|---|---|---|---|---|---|---|---|---|---|---|---|---|---|---|---|---|---|---|---|---|---|
| | | 25 (0.10) | | | 50 (0.20) | | | 75 (0.30) | | | 100 (0.40) | | | 125 (0.50) | | | 150 (0.60) | | | 175 (0.70) | | | 200 (0.80) | | |
| L/s | cfm | Rev/ min | kW | BHP | Rev/ min | kW | BHP | Rev/ min | kW | BHP | Rev/ min | kW | BHP | Rev/ min | kW | BHP | Rev/ min | kW | BHP | Rev/ min | kW | BHP | Rev/ min | kW | BHP |
| | | Field Furnished | | | | | | Kit ZA08 | | | | | | | | | | | | | | | | | |
| 566 | 1200 | 674 | 0.17 | 0.23 | 744 | 0.19 | 0.26 | 813 | 0.22 | 0.29 | 881 | 0.24 | 0.32 | 944 | 0.26 | 0.35 | 999 | 0.28 | 0.38 | 1045 | 0.31 | 0.42 | 1087 | 0.34 | 0.45 |
| 613 | 1300 | 716 | 0.19 | 0.26 | 784 | 0.22 | 0.29 | 851 | 0.25 | 0.33 | 914 | 0.27 | 0.36 | 971 | 0.30 | 0.40 | 1020 | 0.32 | 0.43 | 1064 | 0.35 | 0.47 | 1106 | 0.37 | 0.50 |
| 661 | 1400 | 759 | 0.22 | 0.30 | 824 | 0.25 | 0.34 | 888 | 0.28 | 0.37 | 946 | 0.31 | 0.41 | 998 | 0.34 | 0.45 | 1043 | 0.37 | 0.49 | 1086 | 0.39 | 0.52 | 1129 | 0.41 | 0.55 |
| 708 | 1500 | 803 | 0.26 | 0.35 | 865 | 0.29 | 0.39 | 925 | 0.32 | 0.43 | 979 | 0.35 | 0.47 | 1027 | 0.39 | 0.52 | 1070 | 0.41 | 0.55 | 1113 | 0.43 | 0.58 | 1156 | 0.46 | 0.61 |
| 755 | 1600 | 847 | 0.30 | 0.40 | 905 | 0.34 | 0.45 | 961 | 0.37 | 0.50 | 1013 | 0.40 | 0.54 | 1058 | 0.43 | 0.58 | 1100 | 0.46 | 0.62 | 1142 | 0.48 | 0.65 | 1185 | 0.51 | 0.68 |
| 802 | 1700 | 890 | 0.35 | 0.47 | 944 | 0.39 | 0.52 | 997 | 0.43 | 0.57 | 1047 | 0.46 | 0.62 | 1091 | 0.49 | 0.66 | 1132 | 0.51 | 0.69 | 1173 | 0.54 | 0.72 | 1216 | 0.57 | 0.76 |
| 849 | 1800 | 930 | 0.40 | 0.54 | 982 | 0.45 | 0.6 | 1033 | 0.48 | 0.65 | 1081 | 0.52 | 0.70 | 1124 | 0.55 | 0.74 | 1165 | 0.57 | 0.77 | 1206 | 0.60 | 0.80 | 1248 | 0.63 | 0.84 |
| 897 | 1900 | 970 | 0.46 | 0.62 | 1020 | 0.51 | 0.68 | 1069 | 0.54 | 0.73 | 1116 | 0.58 | 0.78 | 1158 | 0.60 | 0.81 | 1199 | 0.63 | 0.85 | 1239 | 0.66 | 0.89 | 1280 | 0.69 | 0.93 |
| 944 | 2000 | 1009 | 0.53 | 0.71 | 1058 | 0.57 | 0.76 | 1106 | 0.60 | 0.81 | 1151 | 0.64 | 0.86 | 1193 | 0.67 | 0.90 | 1233 | 0.70 | 0.94 | 1273 | 0.73 | 0.98 | 1312 | 0.78 | 1.04 |

| Air Volume | | External Static - Pa (in. w.g.) | | | | | | | | | | | | | | | | | | | | | | | |
|---|---|---|---|---|---|---|---|---|---|---|---|---|---|---|---|---|---|---|---|---|---|---|---|---|---|
| | | 225 (0.90) | | | 250 (1.00) | | | 275 (1.10) | | | 300 (1.20) | | | 325 (1.30) | | | 350 (1.40) | | | 375 (1.50) | | | 400 (1.60) | | |
| L/s | cfm | Rev/ min | kW | BHP | Rev/ min | kW | BHP | Rev/ min | kW | BHP | Rev/ min | kW | BHP | Rev/ min | kW | BHP | Rev/ min | kW | BHP | Rev/ min | kW | BHP | Rev/ min | kW | BHP |
| | | Kit ZA08 | | | Kit ZA11 | | | | | | | | | | | | | | | | | | | | |
| 566 | 1200 | 1131 | 0.36 | 0.48 | 1180 | 0.38 | 0.51 | 1226 | 0.40 | 0.54 | 1269 | 0.43 | 0.57 | 1308 | 0.46 | 0.61 | 1343 | 0.49 | 0.66 | 1378 | 0.52 | 0.70 | 1414 | 0.56 | 0.75 |
| 613 | 1300 | 1151 | 0.40 | 0.53 | 1199 | 0.42 | 0.56 | 1245 | 0.44 | 0.59 | 1287 | 0.47 | 0.63 | 1324 | 0.51 | 0.68 | 1359 | 0.54 | 0.72 | 1394 | 0.57 | 0.77 | 1429 | 0.61 | 0.82 |
| 661 | 1400 | 1175 | 0.43 | 0.58 | 1222 | 0.46 | 0.62 | 1266 | 0.49 | 0.66 | 1306 | 0.52 | 0.70 | 1342 | 0.56 | 0.75 | 1376 | 0.60 | 0.80 | 1410 | 0.63 | 0.85 | 1446 | 0.66 | 0.89 |
| 708 | 1500 | 1201 | 0.48 | 0.65 | 1246 | 0.51 | 0.68 | 1289 | 0.54 | 0.73 | 1327 | 0.58 | 0.78 | 1362 | 0.62 | 0.83 | 1395 | 0.66 | 0.88 | 1429 | 0.69 | 0.93 | 1464 | 0.73 | 0.98 |
| 755 | 1600 | 1229 | 0.54 | 0.72 | 1273 | 0.57 | 0.76 | 1313 | 0.60 | 0.81 | 1350 | 0.64 | 0.86 | 1384 | 0.69 | 0.92 | 1416 | 0.72 | 0.97 | 1450 | 0.76 | 1.02 | 1485 | 0.80 | 1.07 |
| 802 | 1700 | 1258 | 0.60 | 0.80 | 1300 | 0.63 | 0.85 | 1338 | 0.67 | 0.90 | 1374 | 0.72 | 0.96 | 1407 | 0.76 | 1.02 | 1440 | 0.80 | 1.07 | 1473 | 0.84 | 1.12 | 1508 | 0.87 | 1.17 |
| 849 | 1800 | 1289 | 0.66 | 0.89 | 1328 | 0.70 | 0.94 | 1365 | 0.75 | 1.00 | 1399 | 0.79 | 1.06 | 1432 | 0.84 | 1.13 | 1465 | 0.88 | 1.18 | 1498 | 0.92 | 1.23 | 1532 | 0.95 | 1.28 |
| 897 | 1900 | 1319 | 0.74 | 0.99 | 1357 | 0.78 | 1.05 | 1392 | 0.83 | 1.11 | 1426 | 0.88 | 1.18 | 1459 | 0.93 | 1.24 | 1491 | 0.97 | 1.30 | 1524 | 1.01 | 1.35 | 1558 | 1.04 | 1.39 |
| 944 | 2000 | 1350 | 0.82 | 1.10 | 1387 | 0.87 | 1.16 | 1421 | 0.92 | 1.23 | 1454 | 0.97 | 1.30 | 1486 | 1.01 | 1.36 | 1518 | 1.06 | 1.42 | 1551 | 1.10 | 1.47 | 1584 | 1.13 | 1.51 |

## BLOWER DATA - BELT DRIVE - ZCA060 - DOWNFLOW

**BLOWER TABLE INCLUDES RESISTANCE FOR BASE UNIT ONLY WITH DRY INDOOR COIL AND AIR FILTERS IN PLACE.**
**FOR ALL UNITS ADD:**

1 - Any factory installed options air resistance (heat section, economizer, wet coil, etc.).
2 - Any field installed accessories air resistance (duct resistance, diffuser, etc.).
See page 30 for blower motors and drives and wet coil and options/accessory air resistance data.

| Air Volume | | External Static - Pa (in. w.g.) | | | | | | | | | | | | | | | | | | | | | | | |
|---|---|---|---|---|---|---|---|---|---|---|---|---|---|---|---|---|---|---|---|---|---|---|---|---|---|
| | | 25 (0.10) | | | 50 (0.20) | | | 75 (0.30) | | | 100 (0.40) | | | 125 (0.50) | | | 150 (0.60) | | | 175 (0.70) | | | 200 (0.80) | | |
| L/s | cfm | Rev/ min | kW | BHP | Rev/ min | kW | BHP | Rev/ min | kW | BHP | Rev/ min | kW | BHP | Rev/ min | kW | BHP | Rev/ min | kW | BHP | Rev/ min | kW | BHP | Rev/ min | kW | BHP |
| | | Field Furnished | | | | | | | | | Kit ZA09 | | | | | | | | | | | | | | |
| 755 | 1600 | 787 | 0.28 | 0.38 | 854 | 0.31 | 0.41 | 918 | 0.33 | 0.44 | 976 | 0.36 | 0.48 | 1030 | 0.39 | 0.52 | 1078 | 0.42 | 0.56 | 1123 | 0.46 | 0.61 | 1164 | 0.49 | 0.66 |
| 802 | 1700 | 827 | 0.32 | 0.43 | 892 | 0.34 | 0.46 | 952 | 0.37 | 0.49 | 1007 | 0.40 | 0.53 | 1058 | 0.43 | 0.58 | 1105 | 0.47 | 0.63 | 1148 | 0.51 | 0.68 | 1189 | 0.54 | 0.73 |
| 849 | 1800 | 868 | 0.36 | 0.48 | 929 | 0.39 | 0.52 | 986 | 0.41 | 0.55 | 1038 | 0.44 | 0.59 | 1087 | 0.48 | 0.64 | 1132 | 0.51 | 0.69 | 1174 | 0.56 | 0.75 | 1214 | 0.60 | 0.80 |
| 897 | 1900 | 907 | 0.40 | 0.54 | 966 | 0.43 | 0.58 | 1019 | 0.46 | 0.62 | 1069 | 0.49 | 0.66 | 1116 | 0.53 | 0.71 | 1160 | 0.57 | 0.77 | 1200 | 0.61 | 0.82 | 1240 | 0.66 | 0.88 |
| 944 | 2000 | 946 | 0.45 | 0.60 | 1001 | 0.48 | 0.65 | 1053 | 0.51 | 0.69 | 1101 | 0.55 | 0.74 | 1146 | 0.59 | 0.79 | 1188 | 0.63 | 0.85 | 1228 | 0.68 | 0.91 | 1267 | 0.73 | 0.98 |
| 991 | 2100 | 984 | 0.51 | 0.68 | 1037 | 0.54 | 0.72 | 1086 | 0.57 | 0.77 | 1132 | 0.62 | 0.83 | 1176 | 0.66 | 0.89 | 1217 | 0.71 | 0.95 | 1256 | 0.75 | 1.01 | 1295 | 0.81 | 1.08 |
| 1038 | 2200 | 1021 | 0.56 | 0.75 | 1072 | 0.60 | 0.81 | 1120 | 0.64 | 0.86 | 1165 | 0.69 | 0.92 | 1207 | 0.74 | 0.99 | 1247 | 0.78 | 1.05 | 1286 | 0.84 | 1.12 | 1324 | 0.89 | 1.19 |
| 1085 | 2300 | 1059 | 0.63 | 0.84 | 1108 | 0.67 | 0.90 | 1154 | 0.72 | 0.96 | 1197 | 0.77 | 1.03 | 1239 | 0.82 | 1.10 | 1278 | 0.87 | 1.17 | 1316 | 0.93 | 1.24 | 1354 | 0.98 | 1.32 |
| 1133 | 2400 | 1097 | 0.71 | 0.95 | 1144 | 0.75 | 1.01 | 1188 | 0.81 | 1.08 | 1231 | 0.86 | 1.15 | 1271 | 0.91 | 1.22 | 1310 | 0.97 | 1.30 | 1348 | 1.03 | 1.38 | 1385 | 1.08 | 1.45 |

| Air Volume | | External Static - Pa (in. w.g.) | | | | | | | | | | | | | | | | | | | | | | | |
|---|---|---|---|---|---|---|---|---|---|---|---|---|---|---|---|---|---|---|---|---|---|---|---|---|---|
| | | 225 (0.90) | | | 250 (1.00) | | | 275 (1.10) | | | 300 (1.20) | | | 325 (1.30) | | | 350 (1.40) | | | 375 (1.50) | | | 400 (1.60) | | |
| L/s | cfm | Rev/ min | kW | BHP | Rev/ min | kW | BHP | Rev/ min | kW | BHP | Rev/ min | kW | BHP | Rev/ min | kW | BHP | Rev/ min | kW | BHP | Rev/ min | kW | BHP | Rev/ min | kW | BHP |
| | | Kit ZA09 | | | | | | Kit ZA12 | | | | | | | | | | | | | | | | | |
| 755 | 1600 | 1205 | 0.52 | 0.70 | 1245 | 0.56 | 0.75 | 1284 | 0.59 | 0.79 | 1323 | 0.63 | 0.84 | 1361 | 0.66 | 0.88 | 1397 | 0.69 | 0.93 | 1432 | 0.73 | 0.98 | 1467 | 0.77 | 1.03 |
| 802 | 1700 | 1228 | 0.58 | 0.78 | 1268 | 0.61 | 0.82 | 1307 | 0.65 | 0.87 | 1345 | 0.69 | 0.92 | 1382 | 0.72 | 0.97 | 1417 | 0.76 | 1.02 | 1452 | 0.80 | 1.07 | 1486 | 0.83 | 1.11 |
| 849 | 1800 | 1253 | 0.63 | 0.85 | 1292 | 0.68 | 0.91 | 1331 | 0.72 | 0.96 | 1368 | 0.75 | 1.01 | 1404 | 0.79 | 1.06 | 1439 | 0.83 | 1.11 | 1473 | 0.87 | 1.16 | 1506 | 0.90 | 1.21 |
| 897 | 1900 | 1279 | 0.70 | 0.94 | 1317 | 0.75 | 1.00 | 1355 | 0.78 | 1.05 | 1392 | 0.82 | 1.10 | 1427 | 0.87 | 1.16 | 1461 | 0.90 | 1.21 | 1494 | 0.94 | 1.26 | 1527 | 0.98 | 1.31 |
| 944 | 2000 | 1305 | 0.78 | 1.04 | 1343 | 0.82 | 1.10 | 1380 | 0.86 | 1.15 | 1416 | 0.90 | 1.21 | 1450 | 0.94 | 1.26 | 1484 | 0.98 | 1.32 | 1516 | 1.02 | 1.37 | 1549 | 1.06 | 1.42 |
| 991 | 2100 | 1333 | 0.85 | 1.14 | 1370 | 0.90 | 1.21 | 1407 | 0.94 | 1.26 | 1442 | 0.98 | 1.32 | 1475 | 1.03 | 1.38 | 1508 | 1.07 | 1.43 | 1540 | 1.10 | 1.48 | 1572 | 1.14 | 1.53 |
| 1038 | 2200 | 1361 | 0.94 | 1.26 | 1398 | 0.98 | 1.32 | 1434 | 1.03 | 1.38 | 1468 | 1.07 | 1.44 | 1501 | 1.12 | 1.50 | 1533 | 1.16 | 1.55 | 1564 | 1.20 | 1.61 | 1596 | 1.24 | 1.66 |
| 1085 | 2300 | 1391 | 1.04 | 1.39 | 1427 | 1.08 | 1.45 | 1462 | 1.13 | 1.51 | 1495 | 1.17 | 1.57 | 1527 | 1.22 | 1.63 | 1559 | 1.25 | 1.68 | 1590 | 1.29 | 1.73 | 1622 | 1.33 | 1.78 |
| 1133 | 2400 | 1421 | 1.13 | 1.52 | 1456 | 1.19 | 1.59 | 1490 | 1.23 | 1.65 | 1523 | 1.28 | 1.71 | 1555 | 1.31 | 1.76 | 1586 | 1.36 | 1.82 | 1617 | 1.40 | 1.87 | 1649 | 1.43 | 1.92 |

## BLOWER DATA - BELT DRIVE - ZCA060 - HORIZONTAL

**BLOWER TABLE INCLUDES RESISTANCE FOR BASE UNIT ONLY WITH DRY INDOOR COIL AND AIR FILTERS IN PLACE.**
**FOR ALL UNITS ADD:**

1 - Any factory installed options air resistance (heat section, economizer, wet coil, etc.).
2 - Any field installed accessories air resistance (duct resistance, diffuser, etc.).
See page 30 for blower motors and drives and wet coil and options/accessory air resistance data.

| Air Volume | | External Static - Pa (in. w.g.) | | | | | | | | | | | | | | | | | | | | | | | |
|---|---|---|---|---|---|---|---|---|---|---|---|---|---|---|---|---|---|---|---|---|---|---|---|---|---|
| | | 25 (0.10) | | | 50 (0.20) | | | 75 (0.30) | | | 100 (0.40) | | | 125 (0.50) | | | 150 (0.60) | | | 175 (0.70) | | | 200 (0.80) | | |
| L/s | cfm | Rev/ min | kW | BHP | Rev/ min | kW | BHP | Rev/ min | kW | BHP | Rev/ min | kW | BHP | Rev/ min | kW | BHP | Rev/ min | kW | BHP | Rev/ min | kW | BHP | Rev/ min | kW | BHP |
| | | Field Furnished | | | Kit ZA09 | | | | | | | | | | | | | | | | | | | | |
| 755 | 1600 | 864 | 0.31 | 0.42 | 921 | 0.34 | 0.46 | 976 | 0.38 | 0.51 | 1027 | 0.42 | 0.56 | 1072 | 0.45 | 0.6 | 1113 | 0.47 | 0.63 | 1155 | 0.49 | 0.66 | 1198 | 0.51 | 0.69 |
| 802 | 1700 | 907 | 0.36 | 0.48 | 961 | 0.40 | 0.53 | 1013 | 0.43 | 0.58 | 1061 | 0.47 | 0.63 | 1105 | 0.50 | 0.67 | 1146 | 0.52 | 0.70 | 1187 | 0.54 | 0.73 | 1230 | 0.57 | 0.77 |
| 849 | 1800 | 948 | 0.42 | 0.56 | 999 | 0.46 | 0.61 | 1049 | 0.49 | 0.66 | 1096 | 0.53 | 0.71 | 1139 | 0.56 | 0.75 | 1180 | 0.58 | 0.78 | 1221 | 0.61 | 0.82 | 1262 | 0.64 | 0.86 |
| 897 | 1900 | 987 | 0.48 | 0.64 | 1037 | 0.51 | 0.69 | 1086 | 0.55 | 0.74 | 1132 | 0.59 | 0.79 | 1174 | 0.62 | 0.83 | 1214 | 0.64 | 0.86 | 1255 | 0.67 | 0.90 | 1295 | 0.71 | 0.95 |
| 944 | 2000 | 1028 | 0.54 | 0.73 | 1076 | 0.58 | 0.78 | 1123 | 0.62 | 0.83 | 1168 | 0.65 | 0.87 | 1210 | 0.68 | 0.91 | 1250 | 0.72 | 0.96 | 1289 | 0.75 | 1.00 | 1328 | 0.79 | 1.06 |
| 991 | 2100 | 1071 | 0.60 | 0.81 | 1117 | 0.64 | 0.86 | 1163 | 0.68 | 0.91 | 1206 | 0.72 | 0.96 | 1247 | 0.75 | 1.01 | 1286 | 0.79 | 1.06 | 1324 | 0.84 | 1.12 | 1362 | 0.88 | 1.18 |
| 1038 | 2200 | 1116 | 0.68 | 0.91 | 1160 | 0.72 | 0.96 | 1204 | 0.75 | 1.01 | 1245 | 0.80 | 1.07 | 1285 | 0.84 | 1.12 | 1323 | 0.88 | 1.18 | 1360 | 0.93 | 1.25 | 1396 | 0.98 | 1.31 |
| 1085 | 2300 | 1161 | 0.76 | 1.02 | 1204 | 0.80 | 1.07 | 1245 | 0.84 | 1.13 | 1285 | 0.89 | 1.19 | 1323 | 0.93 | 1.25 | 1360 | 0.98 | 1.32 | 1396 | 1.03 | 1.38 | 1432 | 1.08 | 1.45 |
| 1133 | 2400 | 1207 | 0.85 | 1.14 | 1248 | 0.90 | 1.20 | 1288 | 0.94 | 1.26 | 1326 | 0.98 | 1.32 | 1362 | 1.04 | 1.39 | 1398 | 1.09 | 1.46 | 1433 | 1.14 | 1.53 | 1468 | 1.19 | 1.60 |

| Air Volume | | External Static - Pa (in. w.g.) | | | | | | | | | | | | | | | | | | | | | | | |
|---|---|---|---|---|---|---|---|---|---|---|---|---|---|---|---|---|---|---|---|---|---|---|---|---|---|
| | | 225 (0.90) | | | 250 (1.00) | | | 275 (1.10) | | | 300 (1.20) | | | 325 (1.30) | | | 350 (1.40) | | | 375 (1.50) | | | 400 (1.60) | | |
| L/s | cfm | Rev/ min | kW | BHP | Rev/ min | kW | BHP | Rev/ min | kW | BHP | Rev/ min | kW | BHP | Rev/ min | kW | BHP | Rev/ min | kW | BHP | Rev/ min | kW | BHP | Rev/ min | kW | BHP |
| | | Kit ZA09 | | | Kit ZA12 | | | | | | | | | | | | | | | | | | | | |
| 755 | 1600 | 1242 | 0.54 | 0.73 | 1284 | 0.57 | 0.77 | 1324 | 0.61 | 0.82 | 1360 | 0.66 | 0.88 | 1394 | 0.69 | 0.93 | 1426 | 0.74 | 0.99 | 1460 | 0.78 | 1.04 | 1495 | 0.81 | 1.08 |
| 802 | 1700 | 1272 | 0.60 | 0.81 | 1312 | 0.64 | 0.86 | 1350 | 0.69 | 0.92 | 1385 | 0.73 | 0.98 | 1418 | 0.78 | 1.04 | 1451 | 0.81 | 1.09 | 1485 | 0.85 | 1.14 | 1519 | 0.89 | 1.19 |
| 849 | 1800 | 1302 | 0.67 | 0.90 | 1341 | 0.72 | 0.96 | 1377 | 0.76 | 1.02 | 1411 | 0.81 | 1.08 | 1444 | 0.86 | 1.15 | 1477 | 0.90 | 1.20 | 1510 | 0.93 | 1.25 | 1544 | 0.97 | 1.30 |
| 897 | 1900 | 1334 | 0.75 | 1.01 | 1371 | 0.80 | 1.07 | 1406 | 0.84 | 1.13 | 1439 | 0.90 | 1.20 | 1471 | 0.94 | 1.26 | 1504 | 0.98 | 1.32 | 1537 | 1.02 | 1.37 | 1571 | 1.05 | 1.41 |
| 944 | 2000 | 1365 | 0.84 | 1.12 | 1401 | 0.89 | 1.19 | 1435 | 0.93 | 1.25 | 1468 | 0.98 | 1.32 | 1500 | 1.03 | 1.38 | 1532 | 1.07 | 1.44 | 1565 | 1.11 | 1.49 | 1598 | 1.14 | 1.53 |
| 991 | 2100 | 1398 | 0.93 | 1.25 | 1433 | 0.98 | 1.31 | 1466 | 1.03 | 1.38 | 1497 | 1.08 | 1.45 | 1529 | 1.13 | 1.51 | 1561 | 1.16 | 1.56 | 1594 | 1.20 | 1.61 | 1626 | 1.23 | 1.65 |
| 1038 | 2200 | 1431 | 1.03 | 1.38 | 1465 | 1.08 | 1.45 | 1497 | 1.13 | 1.52 | 1528 | 1.18 | 1.58 | 1560 | 1.22 | 1.64 | 1591 | 1.26 | 1.69 | 1623 | 1.29 | 1.73 | 1656 | 1.32 | 1.77 |
| 1085 | 2300 | 1466 | 1.13 | 1.52 | 1498 | 1.19 | 1.59 | 1529 | 1.24 | 1.66 | 1560 | 1.28 | 1.72 | 1591 | 1.32 | 1.77 | 1623 | 1.36 | 1.82 | 1654 | 1.39 | 1.86 | 1686 | 1.42 | 1.90 |
| 1133 | 2400 | 1500 | 1.25 | 1.67 | 1532 | 1.30 | 1.74 | 1563 | 1.34 | 1.80 | 1593 | 1.39 | 1.86 | 1624 | 1.42 | 1.91 | 1655 | 1.46 | 1.96 | 1686 | 1.49 | 2.00 | 1718 | 1.52 | 2.04 |

## BLOWER DATA - BELT DRIVE - ZCA072 - DOWNFLOW

**BLOWER TABLE INCLUDES RESISTANCE FOR BASE UNIT ONLY WITH DRY INDOOR COIL AND AIR FILTERS IN PLACE.**
**FOR ALL UNITS ADD:**

1 - Any factory installed options air resistance (heat section, economizer, wet coil, etc.).
2 - Any field installed accessories air resistance (duct resistance, diffuser, etc.).
See page 30 for blower motors and drives and wet coil and options/accessory air resistance data.

| Air Volume | | External Static - Pa (in. w.g.) | | | | | | | | | | | | | | | | | | | | | | | |
|---|---|---|---|---|---|---|---|---|---|---|---|---|---|---|---|---|---|---|---|---|---|---|---|---|---|
| | | 25 (0.10) | | | 50 (0.20) | | | 75 (0.30) | | | 100 (0.40) | | | 125 (0.50) | | | 150 (0.60) | | | 175 (0.70) | | | 200 (0.80) | | |
| L/s | cfm | Rev/ min | kW | BHP | Rev/ min | kW | BHP | Rev/ min | kW | BHP | Rev/ min | kW | BHP | Rev/ min | kW | BHP | Rev/ min | kW | BHP | Rev/ min | kW | BHP | Rev/ min | kW | BHP |
| | | Field Furnished | | | | | | | | | Kit ZAA03 | | | | | | | | | | | | | | |
| 895 | 1900 | 578 | 0.33 | 0.44 | 610 | 0.37 | 0.49 | 643 | 0.40 | 0.54 | 678 | 0.45 | 0.60 | 714 | 0.48 | 0.65 | 749 | 0.52 | 0.70 | 785 | 0.57 | 0.76 | 819 | 0.61 | 0.82 |
| 945 | 2000 | 600 | 0.37 | 0.50 | 632 | 0.42 | 0.56 | 665 | 0.46 | 0.61 | 699 | 0.49 | 0.66 | 734 | 0.53 | 0.71 | 769 | 0.57 | 0.77 | 803 | 0.62 | 0.83 | 837 | 0.67 | 0.90 |
| 990 | 2100 | 623 | 0.43 | 0.57 | 655 | 0.46 | 0.62 | 688 | 0.51 | 0.68 | 721 | 0.54 | 0.73 | 755 | 0.59 | 0.79 | 789 | 0.63 | 0.84 | 822 | 0.68 | 0.91 | 854 | 0.73 | 0.98 |
| 1040 | 2200 | 647 | 0.48 | 0.65 | 678 | 0.52 | 0.70 | 711 | 0.56 | 0.75 | 743 | 0.60 | 0.81 | 776 | 0.64 | 0.86 | 809 | 0.69 | 0.93 | 841 | 0.75 | 1.00 | 872 | 0.79 | 1.06 |
| 1085 | 2300 | 671 | 0.54 | 0.73 | 702 | 0.58 | 0.78 | 734 | 0.62 | 0.83 | 766 | 0.66 | 0.89 | 798 | 0.71 | 0.95 | 829 | 0.76 | 1.02 | 860 | 0.81 | 1.09 | 890 | 0.87 | 1.16 |
| 1135 | 2400 | 696 | 0.60 | 0.81 | 726 | 0.65 | 0.87 | 757 | 0.69 | 0.92 | 788 | 0.73 | 0.98 | 819 | 0.78 | 1.04 | 850 | 0.83 | 1.11 | 880 | 0.89 | 1.19 | 909 | 0.94 | 1.26 |
| 1180 | 2500 | 720 | 0.67 | 0.90 | 750 | 0.71 | 0.95 | 780 | 0.75 | 1.01 | 811 | 0.80 | 1.07 | 841 | 0.85 | 1.14 | 871 | 0.91 | 1.22 | 900 | 0.97 | 1.30 | 929 | 1.02 | 1.37 |
| 1225 | 2600 | 745 | 0.74 | 0.99 | 774 | 0.78 | 1.05 | 804 | 0.83 | 1.11 | 834 | 0.87 | 1.17 | 864 | 0.93 | 1.25 | 893 | 0.99 | 1.33 | 921 | 1.05 | 1.41 | 949 | 1.11 | 1.49 |
| 1275 | 2700 | 770 | 0.81 | 1.09 | 799 | 0.86 | 1.15 | 828 | 0.90 | 1.21 | 858 | 0.95 | 1.28 | 887 | 1.01 | 1.36 | 916 | 1.07 | 1.44 | 943 | 1.14 | 1.53 | 969 | 1.20 | 1.61 |
| 1320 | 2800 | 795 | 0.89 | 1.19 | 824 | 0.93 | 1.25 | 853 | 0.99 | 1.33 | 882 | 1.04 | 1.40 | 911 | 1.10 | 1.48 | 939 | 1.16 | 1.56 | 965 | 1.23 | 1.65 | 990 | 1.29 | 1.73 |
| 1370 | 2900 | 820 | 0.97 | 1.30 | 849 | 1.02 | 1.37 | 878 | 1.08 | 1.45 | 907 | 1.14 | 1.53 | 935 | 1.20 | 1.61 | 962 | 1.27 | 1.70 | 988 | 1.33 | 1.78 | 1012 | 1.39 | 1.86 |

| Air Volume | | External Static - Pa (in. w.g.) | | | | | | | | | | | | | | | | | | | | | | | |
|---|---|---|---|---|---|---|---|---|---|---|---|---|---|---|---|---|---|---|---|---|---|---|---|---|---|
| | | 225 (0.90) | | | 250 (1.00) | | | 275 (1.10) | | | 300 (1.20) | | | 325 (1.30) | | | 350 (1.40) | | | 375 (1.50) | | | 400 (1.60) | | |
| L/s | cfm | Rev/ min | kW | BHP | Rev/ min | kW | BHP | Rev/ min | kW | BHP | Rev/ min | kW | BHP | Rev/ min | kW | BHP | Rev/ min | kW | BHP | Rev/ min | kW | BHP | Rev/ min | kW | BHP |
| | | Kit ZAA04 | | | | | | | | | | | | | | | | | | | | | Kit ZAA05 | | |
| 895 | 1900 | 853 | 0.66 | 0.88 | 885 | 0.70 | 0.94 | 915 | 0.74 | 0.99 | 944 | 0.78 | 1.05 | 971 | 0.83 | 1.11 | 996 | 0.87 | 1.17 | 1021 | 0.92 | 1.23 | 1045 | 0.96 | 1.29 |
| 945 | 2000 | 869 | 0.72 | 0.96 | 899 | 0.75 | 1.01 | 929 | 0.80 | 1.07 | 957 | 0.84 | 1.13 | 984 | 0.89 | 1.19 | 1009 | 0.93 | 1.25 | 1033 | 0.98 | 1.31 | 1058 | 1.03 | 1.38 |
| 990 | 2100 | 885 | 0.78 | 1.04 | 915 | 0.82 | 1.10 | 944 | 0.86 | 1.15 | 971 | 0.91 | 1.22 | 997 | 0.95 | 1.28 | 1022 | 1.00 | 1.34 | 1046 | 1.04 | 1.40 | 1070 | 1.09 | 1.46 |
| 1040 | 2200 | 902 | 0.84 | 1.13 | 931 | 0.89 | 1.19 | 959 | 0.93 | 1.24 | 986 | 0.98 | 1.31 | 1012 | 1.02 | 1.37 | 1036 | 1.07 | 1.43 | 1060 | 1.12 | 1.50 | 1084 | 1.16 | 1.56 |
| 1085 | 2300 | 920 | 0.92 | 1.23 | 948 | 0.96 | 1.29 | 975 | 1.01 | 1.35 | 1001 | 1.05 | 1.41 | 1027 | 1.10 | 1.47 | 1051 | 1.14 | 1.53 | 1075 | 1.19 | 1.60 | 1098 | 1.24 | 1.66 |
| 1135 | 2400 | 938 | 0.99 | 1.33 | 965 | 1.04 | 1.39 | 992 | 1.08 | 1.45 | 1017 | 1.13 | 1.52 | 1042 | 1.18 | 1.58 | 1066 | 1.22 | 1.64 | 1090 | 1.27 | 1.70 | 1113 | 1.32 | 1.77 |
| 1180 | 2500 | 956 | 1.07 | 1.44 | 983 | 1.13 | 1.51 | 1009 | 1.17 | 1.57 | 1034 | 1.22 | 1.63 | 1059 | 1.26 | 1.69 | 1082 | 1.31 | 1.75 | 1105 | 1.36 | 1.82 | 1128 | 1.40 | 1.88 |
| 1225 | 2600 | 975 | 1.16 | 1.56 | 1001 | 1.22 | 1.63 | 1026 | 1.26 | 1.69 | 1051 | 1.31 | 1.75 | 1075 | 1.35 | 1.81 | 1098 | 1.40 | 1.87 | 1121 | 1.44 | 1.93 | 1143 | 1.49 | 2.00 |
| 1275 | 2700 | 995 | 1.25 | 1.68 | 1020 | 1.31 | 1.75 | 1044 | 1.35 | 1.81 | 1069 | 1.40 | 1.87 | 1092 | 1.44 | 1.93 | 1114 | 1.48 | 1.99 | 1136 | 1.54 | 2.06 | 1158 | 1.59 | 2.13 |
| 1320 | 2800 | 1015 | 1.35 | 1.81 | 1039 | 1.40 | 1.87 | 1063 | 1.45 | 1.94 | 1086 | 1.49 | 2.00 | 1109 | 1.54 | 2.06 | 1131 | 1.58 | 2.12 | 1152 | 1.63 | 2.19 | 1174 | 1.69 | 2.26 |
| 1370 | 2900 | 1035 | 1.45 | 1.94 | 1058 | 1.49 | 2.00 | 1081 | 1.54 | 2.07 | 1104 | 1.59 | 2.13 | 1126 | 1.63 | 2.19 | 1147 | 1.69 | 2.26 | 1168 | 1.74 | 2.33 | 1189 | 1.79 | 2.40 |

## BLOWER DATA - BELT DRIVE - ZCA072 - HORIZONTAL

**BLOWER TABLE INCLUDES RESISTANCE FOR BASE UNIT ONLY WITH DRY INDOOR COIL AND AIR FILTERS IN PLACE.**
**FOR ALL UNITS ADD:**

1 - Any factory installed options air resistance (heat section, economizer, wet coil, etc.).
2 - Any field installed accessories air resistance (duct resistance, diffuser, etc.).
See page 30 for blower motors and drives and wet coil and options/accessory air resistance data.

| Air Volume | | External Static - Pa (in. w.g.) | | | | | | | | | | | | | | | | | | | | | | | |
|---|---|---|---|---|---|---|---|---|---|---|---|---|---|---|---|---|---|---|---|---|---|---|---|---|---|
| | | 25 (0.10) | | | 50 (0.20) | | | 75 (0.30) | | | 100 (0.40) | | | 125 (0.50) | | | 150 (0.60) | | | 175 (0.70) | | | 200 (0.80) | | |
| L/s | cfm | Rev/ min | kW | BHP | Rev/ min | kW | BHP | Rev/ min | kW | BHP | Rev/ min | kW | BHP | Rev/ min | kW | BHP | Rev/ min | kW | BHP | Rev/ min | kW | BHP | Rev/ min | kW | BHP |
| | | Field Furnished | | | | | | | | | Kit ZAA03 | | | | | | | | | | | | | | |
| 895 | 1900 | 581 | 0.33 | 0.44 | 618 | 0.37 | 0.49 | 655 | 0.40 | 0.54 | 692 | 0.44 | 0.59 | 729 | 0.48 | 0.64 | 765 | 0.51 | 0.69 | 800 | 0.56 | 0.75 | 833 | 0.60 | 0.80 |
| 945 | 2000 | 602 | 0.37 | 0.50 | 639 | 0.41 | 0.55 | 676 | 0.46 | 0.61 | 713 | 0.49 | 0.66 | 749 | 0.53 | 0.71 | 784 | 0.57 | 0.76 | 818 | 0.61 | 0.82 | 850 | 0.66 | 0.88 |
| 990 | 2100 | 625 | 0.43 | 0.57 | 661 | 0.46 | 0.62 | 698 | 0.50 | 0.67 | 735 | 0.54 | 0.73 | 770 | 0.58 | 0.78 | 804 | 0.63 | 0.84 | 837 | 0.67 | 0.90 | 868 | 0.72 | 0.96 |
| 1040 | 2200 | 648 | 0.48 | 0.64 | 685 | 0.51 | 0.69 | 721 | 0.56 | 0.75 | 757 | 0.60 | 0.80 | 791 | 0.64 | 0.86 | 824 | 0.69 | 0.92 | 856 | 0.73 | 0.98 | 886 | 0.78 | 1.05 |
| 1085 | 2300 | 673 | 0.53 | 0.71 | 709 | 0.57 | 0.77 | 745 | 0.62 | 0.83 | 780 | 0.66 | 0.88 | 813 | 0.70 | 0.94 | 845 | 0.75 | 1.01 | 876 | 0.81 | 1.08 | 905 | 0.86 | 1.15 |
| 1135 | 2400 | 699 | 0.59 | 0.79 | 734 | 0.63 | 0.85 | 769 | 0.68 | 0.91 | 803 | 0.72 | 0.97 | 835 | 0.78 | 1.04 | 866 | 0.83 | 1.11 | 896 | 0.88 | 1.18 | 924 | 0.93 | 1.25 |
| 1180 | 2500 | 725 | 0.66 | 0.88 | 759 | 0.70 | 0.94 | 793 | 0.75 | 1.00 | 826 | 0.80 | 1.07 | 857 | 0.85 | 1.14 | 887 | 0.90 | 1.21 | 916 | 0.95 | 1.28 | 944 | 1.01 | 1.36 |
| 1225 | 2600 | 752 | 0.72 | 0.97 | 785 | 0.78 | 1.04 | 818 | 0.82 | 1.10 | 850 | 0.87 | 1.17 | 880 | 0.93 | 1.25 | 909 | 0.98 | 1.32 | 937 | 1.04 | 1.40 | 964 | 1.10 | 1.48 |
| 1275 | 2700 | 779 | 0.80 | 1.07 | 811 | 0.85 | 1.14 | 843 | 0.90 | 1.21 | 873 | 0.96 | 1.29 | 902 | 1.02 | 1.37 | 931 | 1.07 | 1.44 | 958 | 1.13 | 1.52 | 984 | 1.19 | 1.60 |
| 1320 | 2800 | 805 | 0.88 | 1.18 | 837 | 0.94 | 1.26 | 868 | 0.99 | 1.33 | 897 | 1.05 | 1.41 | 925 | 1.11 | 1.49 | 952 | 1.17 | 1.57 | 979 | 1.24 | 1.66 | 1004 | 1.30 | 1.74 |
| 1370 | 2900 | 832 | 0.97 | 1.30 | 863 | 1.03 | 1.38 | 892 | 1.09 | 1.46 | 921 | 1.15 | 1.54 | 948 | 1.22 | 1.63 | 974 | 1.28 | 1.71 | 1000 | 1.34 | 1.80 | 1024 | 1.40 | 1.88 |

| Air Volume | | External Static - Pa (in. w.g.) | | | | | | | | | | | | | | | | | | | | | | | |
|---|---|---|---|---|---|---|---|---|---|---|---|---|---|---|---|---|---|---|---|---|---|---|---|---|---|
| | | 225 (0.90) | | | 250 (1.00) | | | 275 (1.10) | | | 300 (1.20) | | | 325 (1.30) | | | 350 (1.40) | | | 375 (1.50) | | | 400 (1.60) | | |
| L/s | cfm | Rev/ min | kW | BHP | Rev/ min | kW | BHP | Rev/ min | kW | BHP | Rev/ min | kW | BHP | Rev/ min | kW | BHP | Rev/ min | kW | BHP | Rev/ min | kW | BHP | Rev/ min | kW | BHP |
| | | Kit ZAA04 | | | | | | | | | | | | | | | | | | Kit ZAA05 | | | | | |
| 895 | 1900 | 864 | 0.65 | 0.87 | 895 | 0.69 | 0.93 | 924 | 0.74 | 0.99 | 953 | 0.79 | 1.06 | 980 | 0.84 | 1.12 | 1007 | 0.88 | 1.18 | 1032 | 0.93 | 1.25 | 1056 | 0.98 | 1.31 |
| 945 | 2000 | 881 | 0.71 | 0.95 | 911 | 0.75 | 1.01 | 940 | 0.81 | 1.08 | 967 | 0.85 | 1.14 | 994 | 0.90 | 1.21 | 1020 | 0.95 | 1.27 | 1044 | 1.00 | 1.34 | 1068 | 1.04 | 1.40 |
| 990 | 2100 | 898 | 0.77 | 1.03 | 927 | 0.82 | 1.10 | 955 | 0.87 | 1.17 | 982 | 0.92 | 1.23 | 1008 | 0.97 | 1.30 | 1033 | 1.02 | 1.37 | 1057 | 1.07 | 1.43 | 1080 | 1.12 | 1.50 |
| 1040 | 2200 | 916 | 0.84 | 1.12 | 944 | 0.89 | 1.19 | 971 | 0.94 | 1.26 | 998 | 0.99 | 1.33 | 1023 | 1.04 | 1.40 | 1047 | 1.10 | 1.47 | 1071 | 1.15 | 1.54 | 1093 | 1.19 | 1.60 |
| 1085 | 2300 | 934 | 0.91 | 1.22 | 961 | 0.96 | 1.29 | 988 | 1.01 | 1.36 | 1014 | 1.07 | 1.43 | 1038 | 1.12 | 1.50 | 1062 | 1.18 | 1.58 | 1085 | 1.23 | 1.65 | 1107 | 1.28 | 1.71 |
| 1135 | 2400 | 952 | 0.98 | 1.32 | 979 | 1.04 | 1.40 | 1005 | 1.10 | 1.47 | 1030 | 1.15 | 1.54 | 1054 | 1.21 | 1.62 | 1077 | 1.26 | 1.69 | 1099 | 1.31 | 1.76 | 1121 | 1.37 | 1.83 |
| 1180 | 2500 | 971 | 1.07 | 1.43 | 997 | 1.13 | 1.51 | 1022 | 1.19 | 1.59 | 1046 | 1.24 | 1.66 | 1069 | 1.30 | 1.74 | 1092 | 1.35 | 1.81 | 1114 | 1.40 | 1.88 | 1135 | 1.45 | 1.95 |
| 1225 | 2600 | 990 | 1.16 | 1.55 | 1015 | 1.22 | 1.63 | 1039 | 1.28 | 1.71 | 1063 | 1.34 | 1.79 | 1086 | 1.39 | 1.86 | 1108 | 1.45 | 1.94 | 1129 | 1.50 | 2.01 | 1150 | 1.54 | 2.07 |
| 1275 | 2700 | 1009 | 1.25 | 1.68 | 1034 | 1.31 | 1.76 | 1057 | 1.37 | 1.84 | 1080 | 1.43 | 1.92 | 1102 | 1.48 | 1.99 | 1124 | 1.54 | 2.07 | 1145 | 1.60 | 2.14 | 1166 | 1.65 | 2.21 |
| 1320 | 2800 | 1028 | 1.36 | 1.82 | 1052 | 1.42 | 1.90 | 1075 | 1.48 | 1.98 | 1097 | 1.54 | 2.06 | 1119 | 1.59 | 2.13 | 1140 | 1.65 | 2.21 | 1161 | 1.70 | 2.28 | 1182 | 1.75 | 2.34 |
| 1370 | 2900 | 1048 | 1.46 | 1.96 | 1071 | 1.52 | 2.04 | 1093 | 1.58 | 2.12 | 1115 | 1.64 | 2.20 | 1136 | 1.70 | 2.28 | 1157 | 1.75 | 2.35 | 1177 | 1.81 | 2.42 | 1198 | 1.85 | 2.48 |

## BLOWER DATA - BELT DRIVE - ZCB036 - DOWNFLOW

**BLOWER TABLE INCLUDES RESISTANCE FOR BASE UNIT ONLY WITH DRY INDOOR COIL AND AIR FILTERS IN PLACE.**
**FOR ALL UNITS ADD:**

1 - Any factory installed options air resistance (heat section, economizer, wet coil, etc.).
2 - Any field installed accessories air resistance (duct resistance, diffuser, etc.).
See page 30 for blower motors and drives and wet coil and options/accessory air resistance data.

| Air Volume | | External Static - Pa (in. w.g.) | | | | | | | | | | | | | | | | | | | | | | | |
|---|---|---|---|---|---|---|---|---|---|---|---|---|---|---|---|---|---|---|---|---|---|---|---|---|---|
| | | 25 (0.10) | | | 50 (0.20) | | | 75 (0.30) | | | 100 (0.40) | | | 125 (0.50) | | | 150 (0.60) | | | 175 (0.70) | | | 200 (0.80) | | |
| L/s | cfm | Rev/ min | kW | BHP | Rev/ min | kW | BHP | Rev/ min | kW | BHP | Rev/ min | kW | BHP | Rev/ min | kW | BHP | Rev/ min | kW | BHP | Rev/ min | kW | BHP | Rev/ min | kW | BHP |
| | | Field Furnished | | | | | | | | | Kit ZA07 | | | | | | | | | | | | | | |
| 425 | 900 | 562 | 0.12 | 0.16 | 629 | 0.13 | 0.18 | 699 | 0.14 | 0.19 | 771 | 0.15 | 0.2 | 840 | 0.16 | 0.22 | 904 | 0.18 | 0.24 | 962 | 0.19 | 0.26 | 1015 | 0.22 | 0.29 |
| 472 | 1000 | 586 | 0.13 | 0.18 | 654 | 0.15 | 0.2 | 725 | 0.16 | 0.21 | 796 | 0.17 | 0.23 | 864 | 0.19 | 0.25 | 927 | 0.20 | 0.27 | 983 | 0.22 | 0.3 | 1034 | 0.25 | 0.33 |
| 519 | 1100 | 612 | 0.15 | 0.2 | 681 | 0.16 | 0.22 | 752 | 0.18 | 0.24 | 823 | 0.19 | 0.26 | 890 | 0.21 | 0.28 | 950 | 0.23 | 0.31 | 1004 | 0.25 | 0.34 | 1054 | 0.28 | 0.37 |
| 566 | 1200 | 641 | 0.17 | 0.23 | 711 | 0.19 | 0.25 | 783 | 0.20 | 0.27 | 852 | 0.22 | 0.29 | 917 | 0.24 | 0.32 | 975 | 0.26 | 0.35 | 1027 | 0.29 | 0.39 | 1074 | 0.31 | 0.42 |
| 613 | 1300 | 673 | 0.19 | 0.25 | 744 | 0.21 | 0.28 | 815 | 0.22 | 0.3 | 882 | 0.25 | 0.33 | 944 | 0.27 | 0.36 | 1000 | 0.30 | 0.4 | 1050 | 0.33 | 0.44 | 1096 | 0.36 | 0.48 |
| 661 | 1400 | 709 | 0.22 | 0.29 | 779 | 0.24 | 0.32 | 849 | 0.25 | 0.34 | 914 | 0.28 | 0.37 | 973 | 0.31 | 0.41 | 1026 | 0.34 | 0.45 | 1074 | 0.37 | 0.49 | 1118 | 0.40 | 0.53 |
| 708 | 1500 | 747 | 0.25 | 0.33 | 816 | 0.27 | 0.36 | 883 | 0.29 | 0.39 | 945 | 0.31 | 0.42 | 1001 | 0.34 | 0.46 | 1052 | 0.38 | 0.51 | 1098 | 0.41 | 0.55 | 1141 | 0.44 | 0.59 |

| Air Volume | | External Static - Pa (in. w.g.) | | | | | | | | | | | | | | | | | | | | | | | |
|---|---|---|---|---|---|---|---|---|---|---|---|---|---|---|---|---|---|---|---|---|---|---|---|---|---|
| | | 225 (0.90) | | | 250 (1.00) | | | 275 (1.10) | | | 300 (1.20) | | | 325 (1.30) | | | 350 (1.40) | | | 375 (1.50) | | | 400 (1.60) | | |
| L/s | cfm | Rev/ min | kW | BHP | Rev/ min | kW | BHP | Rev/ min | kW | BHP | Rev/ min | kW | BHP | Rev/ min | kW | BHP | Rev/ min | kW | BHP | Rev/ min | kW | BHP | Rev/ min | kW | BHP |
| | | Kit ZA07 | | | Kit ZA10 | | | | | | | | | | | | | | | | | | | | |
| 425 | 900 | 1065 | 0.24 | 0.32 | 1112 | 0.26 | 0.35 | 1158 | 0.28 | 0.38 | 1202 | 0.31 | 0.41 | 1243 | 0.33 | 0.44 | 1284 | 0.36 | 0.48 | 1323 | 0.39 | 0.52 | 1364 | 0.41 | 0.55 |
| 472 | 1000 | 1082 | 0.27 | 0.36 | 1128 | 0.29 | 0.39 | 1173 | 0.31 | 0.42 | 1216 | 0.34 | 0.45 | 1257 | 0.37 | 0.49 | 1297 | 0.40 | 0.53 | 1336 | 0.43 | 0.57 | 1375 | 0.45 | 0.60 |
| 519 | 1100 | 1100 | 0.30 | 0.4 | 1145 | 0.33 | 0.44 | 1189 | 0.35 | 0.47 | 1231 | 0.38 | 0.51 | 1272 | 0.40 | 0.54 | 1311 | 0.43 | 0.58 | 1349 | 0.46 | 0.62 | 1388 | 0.49 | 0.66 |
| 566 | 1200 | 1119 | 0.34 | 0.45 | 1163 | 0.37 | 0.49 | 1206 | 0.39 | 0.52 | 1247 | 0.42 | 0.56 | 1287 | 0.45 | 0.60 | 1326 | 0.48 | 0.64 | 1364 | 0.51 | 0.68 | 1402 | 0.54 | 0.72 |
| 613 | 1300 | 1139 | 0.38 | 0.51 | 1182 | 0.41 | 0.55 | 1224 | 0.43 | 0.58 | 1265 | 0.46 | 0.62 | 1304 | 0.49 | 0.66 | 1342 | 0.53 | 0.71 | 1379 | 0.56 | 0.75 | 1416 | 0.59 | 0.79 |
| 661 | 1400 | 1160 | 0.43 | 0.57 | 1202 | 0.46 | 0.61 | 1243 | 0.48 | 0.65 | 1283 | 0.51 | 0.69 | 1322 | 0.54 | 0.73 | 1359 | 0.58 | 0.78 | 1396 | 0.61 | 0.82 | 1432 | 0.65 | 0.87 |
| 708 | 1500 | 1182 | 0.48 | 0.64 | 1223 | 0.51 | 0.68 | 1263 | 0.54 | 0.72 | 1303 | 0.57 | 0.76 | 1341 | 0.60 | 0.81 | 1378 | 0.63 | 0.85 | 1414 | 0.67 | 0.9 | 1449 | 0.70 | 0.94 |

## BLOWER DATA - BELT DRIVE - ZCB036 - HORIZONTAL

**BLOWER TABLE INCLUDES RESISTANCE FOR BASE UNIT ONLY WITH DRY INDOOR COIL AND AIR FILTERS IN PLACE.**
**FOR ALL UNITS ADD:**

1 - Any factory installed options air resistance (heat section, economizer, wet coil, etc.).
2 - Any field installed accessories air resistance (duct resistance, diffuser, etc.).
See page 30 for blower motors and drives and wet coil and options/accessory air resistance data.

| Air Volume | | External Static - Pa (in. w.g.) | | | | | | | | | | | | | | | | | | | | | | | |
|---|---|---|---|---|---|---|---|---|---|---|---|---|---|---|---|---|---|---|---|---|---|---|---|---|---|
| | | 25 (0.10) | | | 50 (0.20) | | | 75 (0.30) | | | 100 (0.40) | | | 125 (0.50) | | | 150 (0.60) | | | 175 (0.70) | | | 200 (0.80) | | |
| L/s | cfm | Rev/ min | kW | BHP | Rev/ min | kW | BHP | Rev/ min | kW | BHP | Rev/ min | kW | BHP | Rev/ min | kW | BHP | Rev/ min | kW | BHP | Rev/ min | kW | BHP | Rev/ min | kW | BHP |
| | | Field Furnished | | | | | | Kit ZA07 | | | | | | | | | | | | | | | | | |
| 425 | 900 | 580 | 0.10 | 0.14 | 649 | 0.13 | 0.17 | 721 | 0.14 | 0.19 | 794 | 0.16 | 0.22 | 868 | 0.18 | 0.24 | 938 | 0.20 | 0.27 | 998 | 0.22 | 0.3 | 1045 | 0.25 | 0.33 |
| 472 | 1000 | 612 | 0.13 | 0.17 | 681 | 0.14 | 0.19 | 752 | 0.16 | 0.22 | 825 | 0.19 | 0.25 | 897 | 0.20 | 0.27 | 963 | 0.22 | 0.3 | 1017 | 0.25 | 0.33 | 1061 | 0.28 | 0.37 |
| 519 | 1100 | 647 | 0.15 | 0.2 | 717 | 0.17 | 0.23 | 788 | 0.19 | 0.26 | 858 | 0.21 | 0.28 | 926 | 0.23 | 0.31 | 986 | 0.25 | 0.34 | 1036 | 0.28 | 0.38 | 1077 | 0.31 | 0.41 |
| 566 | 1200 | 687 | 0.17 | 0.23 | 757 | 0.19 | 0.26 | 826 | 0.22 | 0.29 | 893 | 0.24 | 0.32 | 955 | 0.26 | 0.35 | 1008 | 0.29 | 0.39 | 1054 | 0.31 | 0.42 | 1095 | 0.34 | 0.46 |
| 613 | 1300 | 730 | 0.20 | 0.27 | 798 | 0.22 | 0.3 | 864 | 0.25 | 0.33 | 926 | 0.28 | 0.37 | 982 | 0.30 | 0.4 | 1030 | 0.33 | 0.44 | 1073 | 0.35 | 0.47 | 1116 | 0.38 | 0.51 |
| 661 | 1400 | 775 | 0.23 | 0.31 | 840 | 0.25 | 0.34 | 902 | 0.28 | 0.38 | 959 | 0.31 | 0.42 | 1009 | 0.34 | 0.46 | 1054 | 0.37 | 0.5 | 1096 | 0.40 | 0.53 | 1140 | 0.42 | 0.56 |
| 708 | 1500 | 820 | 0.27 | 0.36 | 881 | 0.30 | 0.4 | 939 | 0.33 | 0.44 | 993 | 0.37 | 0.49 | 1039 | 0.40 | 0.53 | 1082 | 0.42 | 0.56 | 1124 | 0.44 | 0.59 | 1168 | 0.46 | 0.62 |

| Air Volume | | 225 (0.90) | | | 250 (1.00) | | | 275 (1.10) | | | 300 (1.20) | | | 325 (1.30) | | | 350 (1.40) | | | 375 (1.50) | | | 400 (1.60) | | |
|---|---|---|---|---|---|---|---|---|---|---|---|---|---|---|---|---|---|---|---|---|---|---|---|---|---|
| L/s | cfm | Rev/ min | kW | BHP | Rev/ min | kW | BHP | Rev/ min | kW | BHP | Rev/ min | kW | BHP | Rev/ min | kW | BHP | Rev/ min | kW | BHP | Rev/ min | kW | BHP | Rev/ min | kW | BHP |
| | | Kit ZA10 | | | | | | | | | | | | | | | | | | | | | | | |
| 425 | 900 | 1091 | 0.27 | 0.36 | 1140 | 0.28 | 0.38 | 1188 | 0.30 | 0.4 | 1232 | 0.32 | 0.43 | 1272 | 0.34 | 0.46 | 1309 | 0.37 | 0.49 | 1346 | 0.40 | 0.53 | 1383 | 0.43 | 0.57 |
| 472 | 1000 | 1105 | 0.30 | 0.4 | 1154 | 0.31 | 0.42 | 1201 | 0.34 | 0.45 | 1245 | 0.35 | 0.47 | 1284 | 0.37 | 0.5 | 1321 | 0.40 | 0.54 | 1357 | 0.43 | 0.58 | 1394 | 0.46 | 0.62 |
| 519 | 1100 | 1121 | 0.33 | 0.44 | 1169 | 0.35 | 0.47 | 1216 | 0.37 | 0.49 | 1259 | 0.39 | 0.52 | 1298 | 0.42 | 0.56 | 1335 | 0.45 | 0.6 | 1370 | 0.48 | 0.64 | 1406 | 0.51 | 0.69 |
| 566 | 1200 | 1139 | 0.37 | 0.49 | 1187 | 0.39 | 0.52 | 1234 | 0.40 | 0.54 | 1276 | 0.43 | 0.58 | 1314 | 0.46 | 0.62 | 1350 | 0.49 | 0.66 | 1385 | 0.53 | 0.71 | 1421 | 0.56 | 0.75 |
| 613 | 1300 | 1161 | 0.40 | 0.54 | 1208 | 0.43 | 0.57 | 1254 | 0.45 | 0.6 | 1295 | 0.48 | 0.64 | 1332 | 0.51 | 0.69 | 1366 | 0.54 | 0.73 | 1401 | 0.58 | 0.78 | 1436 | 0.62 | 0.83 |
| 661 | 1400 | 1185 | 0.44 | 0.59 | 1232 | 0.47 | 0.63 | 1276 | 0.50 | 0.67 | 1315 | 0.53 | 0.71 | 1351 | 0.57 | 0.76 | 1384 | 0.60 | 0.81 | 1419 | 0.64 | 0.86 | 1454 | 0.67 | 0.9 |
| 708 | 1500 | 1212 | 0.49 | 0.66 | 1257 | 0.52 | 0.7 | 1299 | 0.55 | 0.74 | 1337 | 0.59 | 0.79 | 1371 | 0.63 | 0.84 | 1404 | 0.66 | 0.89 | 1438 | 0.70 | 0.94 | 1473 | 0.74 | 0.99 |

## BLOWER DATA - BELT DRIVE - ZCB048 - DOWNFLOW

**BLOWER TABLE INCLUDES RESISTANCE FOR BASE UNIT ONLY WITH DRY INDOOR COIL AND AIR FILTERS IN PLACE.**
**FOR ALL UNITS ADD:**

1 - Any factory installed options air resistance (heat section, economizer, wet coil, etc.).
2 - Any field installed accessories air resistance (duct resistance, diffuser, etc.).
See page 30 for blower motors and drives and wet coil and options/accessory air resistance data.

| Air Volume | | External Static - Pa (in. w.g.) | | | | | | | | | | | | | | | | | | | | | | | |
|---|---|---|---|---|---|---|---|---|---|---|---|---|---|---|---|---|---|---|---|---|---|---|---|---|---|
| | | 25 (0.10) | | | 50 (0.20) | | | 75 (0.30) | | | 100 (0.40) | | | 125 (0.50) | | | 150 (0.60) | | | 175 (0.70) | | | 200 (0.80) | | |
| L/s | cfm | Rev/ min | kW | BHP | Rev/ min | kW | BHP | Rev/ min | kW | BHP | Rev/ min | kW | BHP | Rev/ min | kW | BHP | Rev/ min | kW | BHP | Rev/ min | kW | BHP | Rev/ min | kW | BHP |
| | | Field Furnished | | | | | | Kit ZA08 | | | | | | | | | | | | | | | | | |
| 565 | 1200 | 641 | 0.17 | 0.23 | 711 | 0.19 | 0.25 | 783 | 0.20 | 0.27 | 852 | 0.22 | 0.29 | 917 | 0.24 | 0.32 | 975 | 0.26 | 0.35 | 1027 | 0.29 | 0.39 | 1074 | 0.31 | 0.42 |
| 615 | 1300 | 673 | 0.19 | 0.25 | 744 | 0.21 | 0.28 | 815 | 0.22 | 0.3 | 882 | 0.25 | 0.33 | 944 | 0.27 | 0.36 | 1000 | 0.30 | 0.4 | 1050 | 0.33 | 0.44 | 1096 | 0.36 | 0.48 |
| 660 | 1400 | 709 | 0.22 | 0.29 | 779 | 0.24 | 0.32 | 849 | 0.25 | 0.34 | 914 | 0.28 | 0.37 | 973 | 0.31 | 0.41 | 1026 | 0.34 | 0.45 | 1074 | 0.37 | 0.49 | 1118 | 0.40 | 0.53 |
| 710 | 1500 | 747 | 0.25 | 0.33 | 816 | 0.27 | 0.36 | 883 | 0.29 | 0.39 | 945 | 0.31 | 0.42 | 1001 | 0.34 | 0.46 | 1052 | 0.38 | 0.51 | 1098 | 0.41 | 0.55 | 1141 | 0.44 | 0.59 |
| 755 | 1600 | 787 | 0.28 | 0.38 | 854 | 0.31 | 0.41 | 918 | 0.33 | 0.44 | 976 | 0.36 | 0.48 | 1030 | 0.39 | 0.52 | 1078 | 0.42 | 0.56 | 1123 | 0.46 | 0.61 | 1164 | 0.49 | 0.66 |
| 800 | 1700 | 827 | 0.32 | 0.43 | 892 | 0.34 | 0.46 | 952 | 0.37 | 0.49 | 1007 | 0.40 | 0.53 | 1058 | 0.43 | 0.58 | 1105 | 0.47 | 0.63 | 1148 | 0.51 | 0.68 | 1189 | 0.54 | 0.73 |
| 850 | 1800 | 868 | 0.36 | 0.48 | 929 | 0.39 | 0.52 | 986 | 0.41 | 0.55 | 1038 | 0.44 | 0.59 | 1087 | 0.48 | 0.64 | 1132 | 0.51 | 0.69 | 1174 | 0.56 | 0.75 | 1214 | 0.60 | 0.8 |
| 895 | 1900 | 907 | 0.40 | 0.54 | 966 | 0.43 | 0.58 | 1019 | 0.46 | 0.62 | 1069 | 0.49 | 0.66 | 1116 | 0.53 | 0.71 | 1160 | 0.57 | 0.77 | 1200 | 0.61 | 0.82 | 1240 | 0.66 | 0.88 |
| 945 | 2000 | 946 | 0.45 | 0.6 | 1001 | 0.48 | 0.65 | 1053 | 0.51 | 0.69 | 1101 | 0.55 | 0.74 | 1146 | 0.59 | 0.79 | 1188 | 0.63 | 0.85 | 1228 | 0.68 | 0.91 | 1267 | 0.73 | 0.98 |

| Air Volume | | External Static - Pa (in. w.g.) | | | | | | | | | | | | | | | | | | | | | | | |
|---|---|---|---|---|---|---|---|---|---|---|---|---|---|---|---|---|---|---|---|---|---|---|---|---|---|
| | | 225 (0.90) | | | 250 (1.00) | | | 275 (1.10) | | | 300 (1.20) | | | 325 (1.30) | | | 350 (1.40) | | | 375 (1.50) | | | 400 (1.60) | | |
| L/s | cfm | Rev/ min | kW | BHP | Rev/ min | kW | BHP | Rev/ min | kW | BHP | Rev/ min | kW | BHP | Rev/ min | kW | BHP | Rev/ min | kW | BHP | Rev/ min | kW | BHP | Rev/ min | kW | BHP |
| | | Kit ZA08 | | | Kit ZA11 | | | | | | | | | | | | | | | | | | | | |
| 565 | 1200 | 1119 | 0.34 | 0.45 | 1163 | 0.37 | 0.49 | 1206 | 0.39 | 0.52 | 1247 | 0.42 | 0.56 | 1287 | 0.45 | 0.6 | 1326 | 0.48 | 0.64 | 1364 | 0.51 | 0.68 | 1402 | 0.54 | 0.72 |
| 615 | 1300 | 1139 | 0.38 | 0.51 | 1182 | 0.41 | 0.55 | 1224 | 0.43 | 0.58 | 1265 | 0.46 | 0.62 | 1304 | 0.49 | 0.66 | 1342 | 0.53 | 0.71 | 1379 | 0.56 | 0.75 | 1416 | 0.59 | 0.79 |
| 660 | 1400 | 1160 | 0.43 | 0.57 | 1202 | 0.46 | 0.61 | 1243 | 0.48 | 0.65 | 1283 | 0.51 | 0.69 | 1322 | 0.54 | 0.73 | 1359 | 0.58 | 0.78 | 1396 | 0.61 | 0.82 | 1432 | 0.65 | 0.87 |
| 710 | 1500 | 1182 | 0.48 | 0.64 | 1223 | 0.51 | 0.68 | 1263 | 0.54 | 0.72 | 1303 | 0.57 | 0.76 | 1341 | 0.60 | 0.81 | 1378 | 0.63 | 0.85 | 1414 | 0.67 | 0.9 | 1449 | 0.70 | 0.94 |
| 755 | 1600 | 1205 | 0.52 | 0.7 | 1245 | 0.56 | 0.75 | 1284 | 0.59 | 0.79 | 1323 | 0.63 | 0.84 | 1361 | 0.66 | 0.88 | 1397 | 0.69 | 0.93 | 1432 | 0.73 | 0.98 | 1467 | 0.77 | 1.03 |
| 800 | 1700 | 1228 | 0.58 | 0.78 | 1268 | 0.61 | 0.82 | 1307 | 0.65 | 0.87 | 1345 | 0.69 | 0.92 | 1382 | 0.72 | 0.97 | 1417 | 0.76 | 1.02 | 1452 | 0.80 | 1.07 | 1486 | 0.83 | 1.11 |
| 850 | 1800 | 1253 | 0.63 | 0.85 | 1292 | 0.68 | 0.91 | 1331 | 0.72 | 0.96 | 1368 | 0.75 | 1.01 | 1404 | 0.79 | 1.06 | 1439 | 0.83 | 1.11 | 1473 | 0.87 | 1.16 | 1506 | 0.90 | 1.21 |
| 895 | 1900 | 1279 | 0.70 | 0.94 | 1317 | 0.75 | 1.00 | 1355 | 0.78 | 1.05 | 1392 | 0.82 | 1.1 | 1427 | 0.87 | 1.16 | 1461 | 0.90 | 1.21 | 1494 | 0.94 | 1.26 | 1527 | 0.98 | 1.31 |
| 945 | 2000 | 1305 | 0.78 | 1.04 | 1343 | 0.82 | 1.10 | 1380 | 0.86 | 1.15 | 1416 | 0.90 | 1.21 | 1450 | 0.94 | 1.26 | 1484 | 0.98 | 1.32 | 1516 | 1.02 | 1.37 | 1549 | 1.06 | 1.42 |

## BLOWER DATA - BELT DRIVE - ZCB048 - HORIZONTAL

**BLOWER TABLE INCLUDES RESISTANCE FOR BASE UNIT ONLY WITH DRY INDOOR COIL AND AIR FILTERS IN PLACE.**
**FOR ALL UNITS ADD:**

1 - Any factory installed options air resistance (heat section, economizer, wet coil, etc.).
2 - Any field installed accessories air resistance (duct resistance, diffuser, etc.).
See page 30 for blower motors and drives and wet coil and options/accessory air resistance data.

| Air Volume | | External Static - Pa (in. w.g.) | | | | | | | | | | | | | | | | | | | | | | | |
|---|---|---|---|---|---|---|---|---|---|---|---|---|---|---|---|---|---|---|---|---|---|---|---|---|---|
| | | 25 (0.10) | | | 50 (0.20) | | | 75 (0.30) | | | 100 (0.40) | | | 125 (0.50) | | | 150 (0.60) | | | 175 (0.70) | | | 200 (0.80) | | |
| L/s | cfm | Rev/ min | kW | BHP | Rev/ min | kW | BHP | Rev/ min | kW | BHP | Rev/ min | kW | BHP | Rev/ min | kW | BHP | Rev/ min | kW | BHP | Rev/ min | kW | BHP | Rev/ min | kW | BHP |
| | | Field Furnished | | | Kit ZA08 | | | | | | | | | | | | | | | | | | | | |
| 565 | 1200 | 687 | 0.17 | 0.23 | 757 | 0.19 | 0.26 | 826 | 0.22 | 0.29 | 893 | 0.24 | 0.32 | 955 | 0.26 | 0.35 | 1008 | 0.29 | 0.39 | 1054 | 0.31 | 0.42 | 1095 | 0.34 | 0.46 |
| 615 | 1300 | 730 | 0.20 | 0.27 | 798 | 0.22 | 0.30 | 864 | 0.25 | 0.33 | 926 | 0.28 | 0.37 | 982 | 0.30 | 0.40 | 1030 | 0.33 | 0.44 | 1073 | 0.35 | 0.47 | 1116 | 0.38 | 0.51 |
| 660 | 1400 | 775 | 0.23 | 0.31 | 840 | 0.25 | 0.34 | 902 | 0.28 | 0.38 | 959 | 0.31 | 0.42 | 1009 | 0.34 | 0.46 | 1054 | 0.37 | 0.50 | 1096 | 0.40 | 0.53 | 1140 | 0.42 | 0.56 |
| 710 | 1500 | 820 | 0.27 | 0.36 | 881 | 0.30 | 0.40 | 939 | 0.33 | 0.44 | 993 | 0.37 | 0.49 | 1039 | 0.40 | 0.53 | 1082 | 0.42 | 0.56 | 1124 | 0.44 | 0.59 | 1168 | 0.46 | 0.62 |
| 755 | 1600 | 864 | 0.31 | 0.42 | 921 | 0.34 | 0.46 | 976 | 0.38 | 0.51 | 1027 | 0.42 | 0.56 | 1072 | 0.45 | 0.60 | 1113 | 0.47 | 0.63 | 1155 | 0.49 | 0.66 | 1198 | 0.51 | 0.69 |
| 800 | 1700 | 907 | 0.36 | 0.48 | 961 | 0.40 | 0.53 | 1013 | 0.43 | 0.58 | 1061 | 0.47 | 0.63 | 1105 | 0.50 | 0.67 | 1146 | 0.52 | 0.70 | 1187 | 0.54 | 0.73 | 1230 | 0.57 | 0.77 |
| 850 | 1800 | 948 | 0.42 | 0.56 | 999 | 0.46 | 0.61 | 1049 | 0.49 | 0.66 | 1096 | 0.53 | 0.71 | 1139 | 0.56 | 0.75 | 1180 | 0.58 | 0.78 | 1221 | 0.61 | 0.82 | 1262 | 0.64 | 0.86 |
| 895 | 1900 | 987 | 0.48 | 0.64 | 1037 | 0.51 | 0.69 | 1086 | 0.55 | 0.74 | 1132 | 0.59 | 0.79 | 1174 | 0.62 | 0.83 | 1214 | 0.64 | 0.86 | 1255 | 0.67 | 0.90 | 1295 | 0.71 | 0.95 |
| 945 | 2000 | 1028 | 0.54 | 0.73 | 1076 | 0.58 | 0.78 | 1123 | 0.62 | 0.83 | 1168 | 0.65 | 0.87 | 1210 | 0.68 | 0.91 | 1250 | 0.72 | 0.96 | 1289 | 0.75 | 1.00 | 1328 | 0.79 | 1.06 |

| Air Volume | | External Static - Pa (in. w.g.) | | | | | | | | | | | | | | | | | | | | | | | |
|---|---|---|---|---|---|---|---|---|---|---|---|---|---|---|---|---|---|---|---|---|---|---|---|---|---|
| | | 225 (0.90) | | | 250 (1.00) | | | 275 (1.10) | | | 300 (1.20) | | | 325 (1.30) | | | 350 (1.40) | | | 375 (1.50) | | | 400 (1.60) | | |
| L/s | cfm | Rev/ min | kW | BHP | Rev/ min | kW | BHP | Rev/ min | kW | BHP | Rev/ min | kW | BHP | Rev/ min | kW | BHP | Rev/ min | kW | BHP | Rev/ min | kW | BHP | Rev/ min | kW | BHP |
| | | Kit ZA11 | | | | | | | | | | | | | | | | | | | | | | | |
| 565 | 1200 | 1139 | 0.37 | 0.49 | 1187 | 0.39 | 0.52 | 1234 | 0.40 | 0.54 | 1276 | 0.43 | 0.58 | 1314 | 0.46 | 0.62 | 1350 | 0.49 | 0.66 | 1385 | 0.53 | 0.71 | 1421 | 0.56 | 0.75 |
| 615 | 1300 | 1161 | 0.40 | 0.54 | 1208 | 0.43 | 0.57 | 1254 | 0.45 | 0.60 | 1295 | 0.48 | 0.64 | 1332 | 0.51 | 0.69 | 1366 | 0.54 | 0.73 | 1401 | 0.58 | 0.78 | 1436 | 0.62 | 0.83 |
| 660 | 1400 | 1185 | 0.44 | 0.59 | 1232 | 0.47 | 0.63 | 1276 | 0.50 | 0.67 | 1315 | 0.53 | 0.71 | 1351 | 0.57 | 0.76 | 1384 | 0.60 | 0.81 | 1419 | 0.64 | 0.86 | 1454 | 0.67 | 0.90 |
| 710 | 1500 | 1212 | 0.49 | 0.66 | 1257 | 0.52 | 0.70 | 1299 | 0.55 | 0.74 | 1337 | 0.59 | 0.79 | 1371 | 0.63 | 0.84 | 1404 | 0.66 | 0.89 | 1438 | 0.70 | 0.94 | 1473 | 0.74 | 0.99 |
| 755 | 1600 | 1242 | 0.54 | 0.73 | 1284 | 0.57 | 0.77 | 1324 | 0.61 | 0.82 | 1360 | 0.66 | 0.88 | 1394 | 0.69 | 0.93 | 1426 | 0.74 | 0.99 | 1460 | 0.78 | 1.04 | 1495 | 0.81 | 1.08 |
| 800 | 1700 | 1272 | 0.60 | 0.81 | 1312 | 0.64 | 0.86 | 1350 | 0.69 | 0.92 | 1385 | 0.73 | 0.98 | 1418 | 0.78 | 1.04 | 1451 | 0.81 | 1.09 | 1485 | 0.85 | 1.14 | 1519 | 0.89 | 1.19 |
| 850 | 1800 | 1302 | 0.67 | 0.9 | 1341 | 0.72 | 0.96 | 1377 | 0.76 | 1.02 | 1411 | 0.81 | 1.08 | 1444 | 0.86 | 1.15 | 1477 | 0.90 | 1.20 | 1510 | 0.93 | 1.25 | 1544 | 0.97 | 1.30 |
| 895 | 1900 | 1334 | 0.75 | 1.01 | 1371 | 0.80 | 1.07 | 1406 | 0.84 | 1.13 | 1439 | 0.90 | 1.20 | 1471 | 0.94 | 1.26 | 1504 | 0.98 | 1.32 | 1537 | 1.02 | 1.37 | 1571 | 1.05 | 1.41 |
| 945 | 2000 | 1365 | 0.84 | 1.12 | 1401 | 0.89 | 1.19 | 1435 | 0.93 | 1.25 | 1468 | 0.98 | 1.32 | 1500 | 1.03 | 1.38 | 1532 | 1.07 | 1.44 | 1565 | 1.11 | 1.49 | 1598 | 1.14 | 1.53 |

## BLOWER DATA - BELT DRIVE - ZCB060 - DOWNFLOW

**BLOWER TABLE INCLUDES RESISTANCE FOR BASE UNIT ONLY WITH DRY INDOOR COIL AND AIR FILTERS IN PLACE.**
**FOR ALL UNITS ADD:**

1 - Any factory installed options air resistance (heat section, economizer, wet coil, etc.).
2 - Any field installed accessories air resistance (duct resistance, diffuser, etc.).
See page 30 for blower motors and drives and wet coil and options/accessory air resistance data.

| Air Volume | | External Static - Pa (in. w.g.) | | | | | | | | | | | | | | | | | | | | | | | |
|---|---|---|---|---|---|---|---|---|---|---|---|---|---|---|---|---|---|---|---|---|---|---|---|---|---|
| | | 25 (0.10) | | | 50 (0.20) | | | 75 (0.30) | | | 100 (0.40) | | | 125 (0.50) | | | 150 (0.60) | | | 175 (0.70) | | | 200 (0.80) | | |
| L/s | cfm | Rev/ min | kW | BHP | Rev/ min | kW | BHP | Rev/ min | kW | BHP | Rev/ min | kW | BHP | Rev/ min | kW | BHP | Rev/ min | kW | BHP | Rev/ min | kW | BHP | Rev/ min | kW | BHP |
| | | Field Furnished | | | | | | | | | Kit ZA09 | | | | | | | | | | | | | | |
| 755 | 1600 | 764 | 0.34 | 0.46 | 823 | 0.38 | 0.51 | 882 | 0.42 | 0.56 | 940 | 0.45 | 0.60 | 997 | 0.48 | 0.65 | 1048 | 0.51 | 0.69 | 1094 | 0.54 | 0.72 | 1140 | 0.56 | 0.75 |
| 800 | 1700 | 806 | 0.40 | 0.53 | 863 | 0.43 | 0.58 | 919 | 0.46 | 0.62 | 975 | 0.50 | 0.67 | 1028 | 0.53 | 0.71 | 1075 | 0.56 | 0.75 | 1119 | 0.58 | 0.78 | 1164 | 0.60 | 0.81 |
| 850 | 1800 | 849 | 0.45 | 0.60 | 903 | 0.48 | 0.65 | 957 | 0.51 | 0.69 | 1010 | 0.55 | 0.74 | 1058 | 0.58 | 0.78 | 1102 | 0.61 | 0.82 | 1145 | 0.63 | 0.85 | 1189 | 0.66 | 0.88 |
| 895 | 1900 | 892 | 0.51 | 0.68 | 944 | 0.54 | 0.72 | 995 | 0.57 | 0.77 | 1045 | 0.61 | 0.82 | 1089 | 0.64 | 0.86 | 1131 | 0.66 | 0.89 | 1174 | 0.69 | 0.92 | 1217 | 0.71 | 0.95 |
| 945 | 2000 | 935 | 0.57 | 0.76 | 984 | 0.60 | 0.81 | 1033 | 0.64 | 0.86 | 1079 | 0.68 | 0.91 | 1122 | 0.71 | 0.95 | 1163 | 0.72 | 0.97 | 1204 | 0.75 | 1.00 | 1247 | 0.77 | 1.03 |
| 990 | 2100 | 977 | 0.63 | 0.85 | 1024 | 0.67 | 0.90 | 1070 | 0.71 | 0.95 | 1114 | 0.75 | 1.00 | 1155 | 0.77 | 1.03 | 1196 | 0.79 | 1.06 | 1237 | 0.81 | 1.09 | 1278 | 0.84 | 1.12 |
| 1040 | 2200 | 1018 | 0.71 | 0.95 | 1063 | 0.74 | 0.99 | 1107 | 0.78 | 1.04 | 1149 | 0.81 | 1.09 | 1190 | 0.84 | 1.12 | 1230 | 0.86 | 1.15 | 1270 | 0.88 | 1.18 | 1310 | 0.91 | 1.22 |
| 1085 | 2300 | 1057 | 0.78 | 1.04 | 1100 | 0.81 | 1.09 | 1143 | 0.85 | 1.14 | 1185 | 0.88 | 1.18 | 1225 | 0.91 | 1.22 | 1264 | 0.93 | 1.25 | 1303 | 0.96 | 1.29 | 1342 | 0.99 | 1.33 |
| 1135 | 2400 | 1096 | 0.85 | 1.14 | 1137 | 0.88 | 1.18 | 1179 | 0.92 | 1.23 | 1220 | 0.95 | 1.27 | 1260 | 0.98 | 1.31 | 1299 | 1.01 | 1.35 | 1337 | 1.04 | 1.40 | 1375 | 1.08 | 1.45 |

| Air Volume | | External Static - Pa (in. w.g.) | | | | | | | | | | | | | | | | | | | | | | | |
|---|---|---|---|---|---|---|---|---|---|---|---|---|---|---|---|---|---|---|---|---|---|---|---|---|---|
| | | 225 (0.90) | | | 250 (1.00) | | | 275 (1.10) | | | 300 (1.20) | | | 325 (1.30) | | | 350 (1.40) | | | 375 (1.50) | | | 400 (1.60) | | |
| L/s | cfm | Rev/ min | kW | BHP | Rev/ min | kW | BHP | Rev/ min | kW | BHP | Rev/ min | kW | BHP | Rev/ min | kW | BHP | Rev/ min | kW | BHP | Rev/ min | kW | BHP | Rev/ min | kW | BHP |
| | | Kit ZA09 | | | Kit ZA12 | | | | | | | | | | | | | | | | | | | | |
| 755 | 1600 | 1185 | 0.59 | 0.79 | 1229 | 0.60 | 0.81 | 1271 | 0.63 | 0.84 | 1313 | 0.64 | 0.86 | 1354 | 0.67 | 0.9 | 1393 | 0.70 | 0.94 | 1431 | 0.73 | 0.98 | 1468 | 0.77 | 1.03 |
| 800 | 1700 | 1208 | 0.63 | 0.84 | 1252 | 0.65 | 0.87 | 1294 | 0.67 | 0.9 | 1335 | 0.70 | 0.94 | 1375 | 0.73 | 0.98 | 1413 | 0.76 | 1.02 | 1449 | 0.80 | 1.07 | 1485 | 0.84 | 1.12 |
| 850 | 1800 | 1233 | 0.68 | 0.91 | 1276 | 0.70 | 0.94 | 1318 | 0.73 | 0.98 | 1358 | 0.76 | 1.02 | 1397 | 0.79 | 1.06 | 1434 | 0.83 | 1.11 | 1469 | 0.87 | 1.16 | 1504 | 0.90 | 1.21 |
| 895 | 1900 | 1261 | 0.73 | 0.98 | 1303 | 0.76 | 1.02 | 1343 | 0.79 | 1.06 | 1382 | 0.83 | 1.11 | 1420 | 0.87 | 1.16 | 1455 | 0.90 | 1.21 | 1490 | 0.94 | 1.26 | 1525 | 0.98 | 1.31 |
| 945 | 2000 | 1289 | 0.80 | 1.07 | 1330 | 0.83 | 1.11 | 1370 | 0.87 | 1.16 | 1407 | 0.90 | 1.21 | 1444 | 0.95 | 1.27 | 1478 | 0.98 | 1.32 | 1513 | 1.02 | 1.37 | 1547 | 1.06 | 1.42 |
| 990 | 2100 | 1319 | 0.87 | 1.16 | 1359 | 0.90 | 1.21 | 1397 | 0.95 | 1.27 | 1433 | 0.98 | 1.32 | 1468 | 1.03 | 1.38 | 1502 | 1.07 | 1.44 | 1536 | 1.11 | 1.49 | 1570 | 1.14 | 1.53 |
| 1040 | 2200 | 1350 | 0.95 | 1.27 | 1388 | 0.98 | 1.32 | 1424 | 1.03 | 1.38 | 1459 | 1.08 | 1.45 | 1494 | 1.13 | 1.51 | 1527 | 1.16 | 1.56 | 1561 | 1.20 | 1.61 | 1594 | 1.23 | 1.65 |
| 1085 | 2300 | 1380 | 1.03 | 1.38 | 1417 | 1.08 | 1.45 | 1452 | 1.13 | 1.51 | 1486 | 1.18 | 1.58 | 1520 | 1.22 | 1.63 | 1553 | 1.25 | 1.68 | 1587 | 1.29 | 1.73 | 1620 | 1.33 | 1.78 |
| 1135 | 2400 | 1411 | 1.13 | 1.51 | 1446 | 1.18 | 1.58 | 1480 | 1.23 | 1.65 | 1514 | 1.28 | 1.71 | 1547 | 1.32 | 1.77 | 1580 | 1.35 | 1.81 | 1614 | 1.39 | 1.86 | 1648 | 1.42 | 1.90 |

## BLOWER DATA - BELT DRIVE - ZCB060 - HORIZONTAL

**BLOWER TABLE INCLUDES RESISTANCE FOR BASE UNIT ONLY WITH DRY INDOOR COIL AND AIR FILTERS IN PLACE.**
**FOR ALL UNITS ADD:**

1 - Any factory installed options air resistance (heat section, economizer, wet coil, etc.).
2 - Any field installed accessories air resistance (duct resistance, diffuser, etc.).
See page 30 for blower motors and drives and wet coil and options/accessory air resistance data.

| Air Volume | | External Static - Pa (in. w.g.) | | | | | | | | | | | | | | | | | | | | | | | |
|---|---|---|---|---|---|---|---|---|---|---|---|---|---|---|---|---|---|---|---|---|---|---|---|---|---|
| | | 25 (0.10) | | | 50 (0.20) | | | 75 (0.30) | | | 100 (0.40) | | | 125 (0.50) | | | 150 (0.60) | | | 175 (0.70) | | | 200 (0.80) | | |
| L/s | cfm | Rev/ min | kW | BHP | Rev/ min | kW | BHP | Rev/ min | kW | BHP | Rev/ min | kW | BHP | Rev/ min | kW | BHP | Rev/ min | kW | BHP | Rev/ min | kW | BHP | Rev/ min | kW | BHP |
| | | Field Furnished | | | | | | | | | Kit ZA09 | | | | | | | | | | | | | | |
| 755 | 1600 | 752 | 0.30 | 0.40 | 818 | 0.34 | 0.45 | 882 | 0.37 | 0.50 | 943 | 0.41 | 0.55 | 999 | 0.44 | 0.59 | 1050 | 0.46 | 0.62 | 1097 | 0.49 | 0.66 | 1142 | 0.51 | 0.69 |
| 800 | 1700 | 792 | 0.34 | 0.46 | 855 | 0.39 | 0.52 | 917 | 0.42 | 0.56 | 975 | 0.46 | 0.61 | 1028 | 0.48 | 0.64 | 1077 | 0.51 | 0.68 | 1123 | 0.54 | 0.72 | 1166 | 0.56 | 0.75 |
| 850 | 1800 | 832 | 0.40 | 0.53 | 894 | 0.43 | 0.58 | 952 | 0.47 | 0.63 | 1007 | 0.50 | 0.67 | 1058 | 0.52 | 0.70 | 1105 | 0.55 | 0.74 | 1149 | 0.58 | 0.78 | 1192 | 0.61 | 0.82 |
| 895 | 1900 | 873 | 0.45 | 0.60 | 932 | 0.48 | 0.65 | 988 | 0.51 | 0.69 | 1040 | 0.54 | 0.73 | 1088 | 0.57 | 0.77 | 1134 | 0.60 | 0.81 | 1177 | 0.63 | 0.85 | 1219 | 0.67 | 0.90 |
| 945 | 2000 | 914 | 0.50 | 0.67 | 970 | 0.54 | 0.72 | 1023 | 0.57 | 0.76 | 1073 | 0.60 | 0.80 | 1120 | 0.63 | 0.85 | 1163 | 0.66 | 0.89 | 1205 | 0.70 | 0.94 | 1246 | 0.74 | 0.99 |
| 990 | 2100 | 955 | 0.55 | 0.74 | 1009 | 0.59 | 0.79 | 1059 | 0.63 | 0.84 | 1107 | 0.66 | 0.89 | 1152 | 0.69 | 0.93 | 1194 | 0.73 | 0.98 | 1235 | 0.77 | 1.03 | 1275 | 0.81 | 1.09 |
| 1040 | 2200 | 995 | 0.62 | 0.83 | 1047 | 0.66 | 0.88 | 1095 | 0.69 | 0.93 | 1141 | 0.73 | 0.98 | 1184 | 0.77 | 1.03 | 1225 | 0.81 | 1.08 | 1265 | 0.85 | 1.14 | 1304 | 0.90 | 1.20 |
| 1085 | 2300 | 1036 | 0.69 | 0.92 | 1085 | 0.72 | 0.97 | 1132 | 0.76 | 1.02 | 1175 | 0.81 | 1.08 | 1217 | 0.84 | 1.13 | 1257 | 0.89 | 1.19 | 1296 | 0.94 | 1.26 | 1334 | 0.98 | 1.32 |
| 1135 | 2400 | 1077 | 0.75 | 1.01 | 1124 | 0.80 | 1.07 | 1168 | 0.84 | 1.13 | 1210 | 0.89 | 1.19 | 1251 | 0.93 | 1.25 | 1290 | 0.98 | 1.32 | 1328 | 1.04 | 1.39 | 1365 | 1.09 | 1.46 |

| Air Volume | | External Static - Pa (in. w.g.) | | | | | | | | | | | | | | | | | | | | | | | |
|---|---|---|---|---|---|---|---|---|---|---|---|---|---|---|---|---|---|---|---|---|---|---|---|---|---|
| | | 225 (0.90) | | | 250 (1.00) | | | 275 (1.10) | | | 300 (1.20) | | | 325 (1.30) | | | 350 (1.40) | | | 375 (1.50) | | | 400 (1.60) | | |
| L/s | cfm | Rev/ min | kW | BHP | Rev/ min | kW | BHP | Rev/ min | kW | BHP | Rev/ min | kW | BHP | Rev/ min | kW | BHP | Rev/ min | kW | BHP | Rev/ min | kW | BHP | Rev/ min | kW | BHP |
| | | Kit ZA09 | | | | | | Kit ZA12 | | | | | | | | | | | | | | | | | |
| 755 | 1600 | 1185 | 0.54 | 0.72 | 1228 | 0.56 | 0.75 | 1270 | 0.59 | 0.79 | 1310 | 0.62 | 0.83 | 1349 | 0.66 | 0.88 | 1387 | 0.69 | 0.93 | 1423 | 0.73 | 0.98 | 1459 | 0.77 | 1.03 |
| 800 | 1700 | 1209 | 0.58 | 0.78 | 1251 | 0.61 | 0.82 | 1292 | 0.65 | 0.87 | 1331 | 0.69 | 0.92 | 1370 | 0.72 | 0.97 | 1407 | 0.76 | 1.02 | 1443 | 0.80 | 1.07 | 1478 | 0.84 | 1.12 |
| 850 | 1800 | 1234 | 0.64 | 0.86 | 1275 | 0.68 | 0.91 | 1315 | 0.72 | 0.96 | 1354 | 0.75 | 1.01 | 1391 | 0.79 | 1.06 | 1428 | 0.83 | 1.11 | 1463 | 0.87 | 1.17 | 1498 | 0.91 | 1.22 |
| 895 | 1900 | 1260 | 0.71 | 0.95 | 1300 | 0.75 | 1.00 | 1340 | 0.78 | 1.05 | 1377 | 0.83 | 1.11 | 1414 | 0.87 | 1.16 | 1450 | 0.91 | 1.22 | 1485 | 0.95 | 1.27 | 1519 | 0.98 | 1.32 |
| 945 | 2000 | 1287 | 0.78 | 1.04 | 1326 | 0.82 | 1.10 | 1365 | 0.87 | 1.16 | 1402 | 0.90 | 1.21 | 1437 | 0.95 | 1.27 | 1472 | 0.99 | 1.33 | 1507 | 1.03 | 1.38 | 1541 | 1.07 | 1.43 |
| 990 | 2100 | 1314 | 0.86 | 1.15 | 1353 | 0.90 | 1.21 | 1391 | 0.95 | 1.27 | 1427 | 0.99 | 1.33 | 1462 | 1.04 | 1.39 | 1496 | 1.07 | 1.44 | 1530 | 1.12 | 1.50 | 1564 | 1.16 | 1.55 |
| 1040 | 2200 | 1343 | 0.94 | 1.26 | 1381 | 0.99 | 1.33 | 1417 | 1.04 | 1.39 | 1453 | 1.08 | 1.45 | 1487 | 1.13 | 1.51 | 1521 | 1.16 | 1.56 | 1555 | 1.21 | 1.62 | 1589 | 1.25 | 1.67 |
| 1085 | 2300 | 1372 | 1.04 | 1.39 | 1409 | 1.08 | 1.45 | 1445 | 1.13 | 1.52 | 1480 | 1.18 | 1.58 | 1513 | 1.22 | 1.64 | 1547 | 1.26 | 1.69 | 1580 | 1.31 | 1.75 | 1614 | 1.34 | 1.80 |
| 1135 | 2400 | 1402 | 1.13 | 1.52 | 1438 | 1.19 | 1.59 | 1473 | 1.23 | 1.65 | 1507 | 1.28 | 1.71 | 1541 | 1.32 | 1.77 | 1574 | 1.37 | 1.83 | 1607 | 1.40 | 1.88 | 1641 | 1.44 | 1.93 |

## BLOWER DATA

### DRIVE KIT SPECIFICATIONS

| Model No. | Blower Motor | | | | Drive Kit No. | Rev/Min Range |
|---|---|---|---|---|---|---|
| | Nominal kW | Maximum kW | Nominal HP | Maximum HP | | |
| ZCA/ZCB036 | 0.62 | 0.71 | 0.83 | 0.95 | ZA07<br>ZA10 | 705 - 1077<br>1025 - 1391 |
| | 0.93 | 1.07 | 1.25 | 1.43 | | |
| ZCA/ZCB048 | 0.62 | 0.71 | 0.83 | 0.95 | ZA08<br>[1] ZA11 | 759 - 1158<br>1111 - 1437 |
| | 0.93 | 1.07 | 1.25 | 1.43 | | |
| ZCA/ZCB060 | 0.93 | 1.07 | 1.25 | 1.43 | ZA09<br>[2] ZA12 | 919 - 1247<br>1190 - 1540 |
| | 1.24 | 1.42 | 1.66 | 1.91 | | |
| ZCA072 | 0.93 | 1.07 | 1.25 | 1.43 | ZAA03<br>ZAA04<br>ZAA05 | 665 - 921<br>768 - 1023<br>921 -1177 |
| | 1.24 | 1.42 | 1.66 | 1.91 | | |

NOTE - Using total air volume and system static pressure requirements determine from blower performance tables rev/min and motor size required. Maximum usable size of motors furnished are shown. If motors of comparable size are used, be sure to keep within the service factor limitations outlined on the motor nameplate.

[1] ZA11 drive kits require the 0.93 kW (1.25 hp) motor.

[2] ZA12 drive kit requires the 1.24 kW (1.66 hp) motor.

### POWER EXHAUST FAN PERFORMANCE

| Return Air System Static Pressure | | Air Volume Exhausted | |
|---|---|---|---|
| Pa | in. w.g. | L/s | cfm |
| 0 | 0.00 | 880 | 1865 |
| 12 | 0.05 | 842 | 1785 |
| 25 | 0.10 | 807 | 1710 |
| 37 | 0.15 | 769 | 1630 |
| 50 | 0.20 | 729 | 1545 |
| 62 | 0.25 | 684 | 1450 |
| 75 | 0.30 | 637 | 1350 |
| 87 | 0.35 | 585 | 1240 |

### OPTIONS / ACCESSORIES AIR RESISTANCE

| Air Volume | | Wet Indoor Coil | | | | | | | | Electric Heat | | Economizer | | | |
|---|---|---|---|---|---|---|---|---|---|---|---|---|---|---|---|
| | | ZCA036, ZCA048 | | ZCB036, ZCB048 | | ZCA060 | | ZCB060, ZCA072 | | | | Downflow | | Horizontal | |
| L/s | cfm | Pa | in. w.g. | Pa | in. w.g. | Pa | in. w.g. | Pa | in. w.g. | Pa | in. w.g. | Pa | in. w.g. | Pa | in. w.g. |
| 425 | 900 | 2 | 0.01 | 2 | 0.01 | - - - | - - - | - - - | - - - | 12 | 0.05 | 7 | 0.03 | 10 | 0.04 |
| 472 | 1000 | 2 | 0.01 | 5 | 0.02 | - - - | - - - | - - - | - - - | 15 | 0.06 | 7 | 0.03 | 12 | 0.05 |
| 519 | 1100 | 5 | 0.02 | 5 | 0.02 | - - - | - - - | - - - | - - - | 20 | 0.08 | 10 | 0.04 | 12 | 0.05 |
| 566 | 1200 | 5 | 0.02 | 5 | 0.02 | - - - | - - - | - - - | - - - | 22 | 0.09 | 12 | 0.05 | 15 | 0.06 |
| 613 | 1300 | 5 | 0.02 | 7 | 0.03 | - - - | - - - | - - - | - - - | 30 | 0.12 | 12 | 0.05 | 17 | 0.07 |
| 661 | 1400 | 7 | 0.03 | 7 | 0.03 | - - - | - - - | - - - | - - - | 42 | 0.17 | 15 | 0.06 | 20 | 0.08 |
| 708 | 1500 | 7 | 0.03 | 10 | 0.04 | - - - | - - - | - - - | - - - | 55 | 0.22 | 17 | 0.07 | 20 | 0.08 |
| 755 | 1600 | 7 | 0.03 | 10 | 0.04 | 10 | 0.04 | 7 | 0.03 | 65 | 0.26 | 20 | 0.08 | 22 | 0.09 |
| 802 | 1700 | 10 | 0.04 | 12 | 0.05 | 12 | 0.05 | 7 | 0.03 | 75 | 0.30 | 22 | 0.09 | 25 | 0.10 |
| 849 | 1800 | 10 | 0.04 | 12 | 0.05 | 12 | 0.05 | 7 | 0.03 | 82 | 0.33 | 25 | 0.10 | 27 | 0.11 |
| 897 | 1900 | 10 | 0.04 | 15 | 0.06 | 15 | 0.06 | 10 | 0.04 | 82 | 0.33 | 27 | 0.11 | 30 | 0.12 |
| 944 | 2000 | 12 | 0.05 | 15 | 0.06 | 15 | 0.06 | 10 | 0.04 | 77 | 0.31 | 30 | 0.12 | 32 | 0.13 |
| 991 | 2100 | - - - | - - - | - - - | - - - | 17 | 0.07 | 12 | 0.05 | 67 | 0.27 | 32 | 0.13 | 35 | 0.14 |
| 1038 | 2200 | - - - | - - - | - - - | - - - | 20 | 0.08 | 12 | 0.05 | 72 | 0.29 | 35 | 0.14 | 37 | 0.15 |
| 1085 | 2300 | - - - | - - - | - - - | - - - | 20 | 0.08 | 12 | 0.05 | 77 | 0.31 | 37 | 0.15 | 40 | 0.16 |
| 1133 | 2400 | - - - | - - - | - - - | - - - | 22 | 0.09 | 15 | 0.06 | 80 | 0.32 | 40 | 0.16 | 45 | 0.18 |
| 1180 | 2500 | - - - | - - - | - - - | - - - | - - - | - - - | 15 | 0.06 | 85 | 0.34 | 45 | 0.18 | 47 | 0.19 |
| 1227 | 2600 | - - - | - - - | - - - | - - - | - - - | - - - | 17 | 0.07 | 94 | 0.38 | 47 | 0.19 | 50 | 0.20 |
| 1274 | 2700 | - - - | - - - | - - - | - - - | - - - | - - - | 17 | 0.07 | 104 | 0.42 | 50 | 0.20 | 52 | 0.21 |
| 1321 | 2800 | - - - | - - - | - - - | - - - | - - - | - - - | 17 | 0.07 | 112 | 0.45 | 55 | 0.22 | 57 | 0.23 |
| 1369 | 2900 | - - - | - - - | - - - | - - - | - - - | - - - | 20 | 0.08 | 122 | 0.49 | 57 | 0.23 | 60 | 0.24 |

## BLOWER DATA

### CEILING DIFFUSERS AIR RESISTANCE

| Air Volume | | RTD9-65 Step–Down Diffuser | | | | | | FD9-65 Flush Diffuser | | RTD11-95 Step–Down Diffuser | | | | | | FD11-95 Flush Diffuser | |
|---|---|---|---|---|---|---|---|---|---|---|---|---|---|---|---|---|---|
| | | 2 Ends Open | | 1 Side & 2 Ends Open | | All Ends & Sides Open | | | | 2 Ends Open | | 1 Side & 2 Ends Open | | All Ends & Sides Open | | | |
| L/s | cfm | Pa | in. w.g. | Pa | in. w.g. | Pa | in. w.g. | Pa | in. w.g. | Pa | in. w.g. | Pa | in. w.g. | Pa | in. w.g. | Pa | in. w.g. |
| 375 | 800 | 37 | 0.15 | 32 | 0.13 | 27 | 0.11 | 27 | 0.11 | - - - | - - - | - - - | - - - | - - - | - - - | - - - | - - - |
| 470 | 1000 | 47 | 0.19 | 40 | 0.16 | 35 | 0.14 | 35 | 0.14 | - - - | - - - | - - - | - - - | - - - | - - - | - - - | - - - |
| 565 | 1200 | 62 | 0.25 | 50 | 0.20 | 42 | 0.17 | 42 | 0.17 | - - - | - - - | - - - | - - - | - - - | - - - | - - - | - - - |
| 660 | 1400 | 82 | 0.33 | 65 | 0.26 | 50 | 0.20 | 50 | 0.20 | - - - | - - - | - - - | - - - | - - - | - - - | - - - | - - - |
| 755 | 1600 | 107 | 0.43 | 80 | 0.32 | 50 | 0.20 | 50 | 0.24 | - - - | - - - | - - - | - - - | - - - | - - - | - - - | - - - |
| 850 | 1800 | 139 | 0.56 | 99 | 0.40 | 75 | 0.30 | 75 | 0.30 | 32 | 0.13 | 27 | 0.11 | 22 | 0.09 | 22 | 0.09 |
| 945 | 2000 | 182 | 0.73 | 124 | 0.50 | 90 | 0.36 | 90 | 0.36 | 37 | 0.15 | 32 | 0.13 | 27 | 0.11 | 25 | 0.10 |
| 1040 | 2200 | 236 | 0.95 | 157 | 0.63 | 109 | 0.44 | 109 | 0.44 | 45 | 0.18 | 37 | 0.15 | 30 | 0.12 | 30 | 0.12 |
| 1130 | 2400 | - - - | - - - | - - - | - - - | - - - | - - - | - - - | - - - | 52 | 0.21 | 45 | 0.18 | 37 | 0.15 | 35 | 0.14 |
| 1225 | 2600 | - - - | - - - | - - - | - - - | - - - | - - - | - - - | - - - | 60 | 0.24 | 52 | 0.21 | 45 | 0.18 | 42 | 0.17 |
| 1320 | 2800 | - - - | - - - | - - - | - - - | - - - | - - - | - - - | - - - | 67 | 0.27 | 60 | 0.24 | 52 | 0.21 | 50 | 0.20 |
| 1415 | 3000 | - - - | - - - | - - - | - - - | - - - | - - - | - - - | - - - | 80 | 0.32 | 72 | 0.29 | 62 | 0.25 | 62 | 0.25 |
| 1510 | 3200 | - - - | - - - | - - - | - - - | - - - | - - - | - - - | - - - | 102 | 0.41 | 92 | 0.37 | 80 | 0.32 | 77 | 0.31 |
| 1605 | 3400 | - - - | - - - | - - - | - - - | - - - | - - - | - - - | - - - | 124 | 0.50 | 112 | 0.45 | 97 | 0.39 | 92 | 0.37 |
| 1700 | 3600 | - - - | - - - | - - - | - - - | - - - | - - - | - - - | - - - | 152 | 0.61 | 134 | 0.54 | 119 | 0.48 | 109 | 0.44 |

### CEILING DIFFUSER AIR THROW DATA

| Air Volume | | [1] Effective Throw | | | |
|---|---|---|---|---|---|
| Model No. | | RTD9-65 | | FD9-65 | |
| L/s | cfm | m | ft. | m | ft. |
| 375 | 800 | 3 - 5 | 10 - 17 | 4 - 5 | 14 - 18 |
| 470 | 1000 | 3 - 5 | 10 - 17 | 5 - 6 | 15 - 20 |
| 565 | 1200 | 3 - 5 | 11 - 18 | 5 - 7 | 16 - 22 |
| 660 | 1400 | 4 - 6 | 12 - 19 | 5 - 7 | 17 - 24 |
| 755 | 1600 | 4 - 6 | 12 - 20 | 5 - 8 | 18 - 25 |
| 850 | 1800 | 4 - 6 | 13 - 21 | 6 - 9 | 20 - 28 |
| 945 | 2000 | 4 - 7 | 14 - 23 | 6 - 9 | 21 - 29 |
| 1040 | 2200 | 5 - 8 | 16 - 25 | 7 - 9 | 22 - 30 |
| Model No. | | RTD11-95 | | FD11-95 | |
| 1225 | 2600 | 7 - 9 | 24 - 29 | 6 - 7 | 19 - 24 |
| 1320 | 2800 | 8 - 9 | 25 - 30 | 6 - 9 | 20 - 28 |
| 1415 | 3000 | 8 - 10 | 27 - 33 | 6 - 9 | 21 - 29 |
| 1510 | 3200 | 9 - 11 | 28 - 35 | 7 9 | 22 - 29 |
| 1605 | 3400 | 9 - 11 | 30 - 37 | 7 - 9 | 22 - 30 |
| 1700 | 3600 | 8 - 10 | 25 - 33 | 7 - 8 | 22 - 24 |

[1] Effective throw based on terminal velocities of 23 m per minute ( 75 ft. per minute).

## ELECTRICAL DATA - ZCA

| | | ZCA036S4 | | ZCA048S4 | | ZCA060S4 | | ZCA072S4 | |
|---|---|---|---|---|---|---|---|---|---|
| [1] **Voltage - 50hz with Neutral** | | **380/420V - 3 Ph** | | **380/420V - 3 Ph** | | **380/420V - 3 Ph** | | **380/420V - 3 Ph** | |
| Compressor | Rated Load Amps | 4 | | 5.5 | | 8 | | 8 | |
| | Locked Rotor Amps | 31 | | 37 | | 59 | | 67.1 | |
| Outdoor Fan Motor | Full Load Amps | 0.6 | | 0.9 | | 1 | | 1 | |
| Power Exhaust (1) 0.25 kW | Full Load Amps | 0.6 | | 0.6 | | 0.6 | | 0.6 | |
| Indoor Blower Motor | kW | 0.62 | 0.93 | 0.62 | 0.93 | 0.93 | 1.24 | 0.93 | 1.24 |
| | Full Load Amps | 1.6 | 2 | 1.6 | 2 | 2 | 2.9 | 2 | 2.9 |
| [2] Maximum Overcurrent Protection | Unit Only | 15 | 15 | 15 | 15 | 20 | 20 | 20 | 20 |
| | With (1) 0.25 kW Power Exhaust | 15 | 15 | 15 | 15 | 20 | 20 | 20 | 20 |
| [3] Minimum Circuit Ampacity | Unit Only | 8 | 8 | 10 | 10 | 13 | 14 | 13 | 14 |
| | With (1) 0.25 kW Power Exhaust | 8 | 9 | 10 | 11 | 14 | 15 | 14 | 15 |

## ELECTRIC HEAT DATA

| | | | | | | | | | | |
|---|---|---|---|---|---|---|---|---|---|---|
| **Electric Heat Voltage** | | | **420V** | **420V** | **420V** | **420V** | **420V** | **420V** | **420V** | **420V** |
| [2] Maximum Overcurrent Protection | Unit+ Electric Heat | **3.8 kW** | 15 | 15 | 15 | 15 | 20 | 20 | - - - | - - - |
| | | **5.7 kW** | 15 | 15 | 15 | 15 | 20 | 20 | 20 | 20 |
| | | **7.7 kW** | 20 | 20 | 20 | 20 | 20 | 20 | 20 | 20 |
| | | **11.5 kW** | 25 | 25 | 25 | 25 | 25 | 25 | 25 | 25 |
| | | **17.2 kW** | - - - | - - - | 35 | 35 | 35 | 35 | 35 | 35 |
| | | **23 kW** | - - - | - - - | - - - | - - - | - - - | - - - | 45 | 45 |
| [3] Minimum Circuit Ampacity | Unit+ Electric Heat | **3.8 kW** | 9 | 10 | 10 | 10 | 13 | 14 | - - - | - - - |
| | | **5.7 kW** | 12 | 13 | 12 | 13 | 13 | 14 | 13 | 14 |
| | | **7.7 kW** | 16 | 16 | 16 | 16 | 16 | 17 | 16 | 17 |
| | | **11.5 kW** | 22 | 23 | 22 | 23 | 23 | 24 | 23 | 24 |
| | | **17.2 kW** | - - - | - - - | 32 | 33 | 33 | 34 | 33 | 34 |
| | | **23 kW** | - - - | - - - | - - - | - - - | - - - | - - - | 42 | 44 |
| [2] Maximum Overcurrent Protection | Unit+ Electric Heat and (1) 0.25 kW Power Exhaust | **3.8 kW** | 15 | 15 | 15 | 15 | 20 | 20 | - - - | - - - |
| | | **5.7 kW** | 15 | 15 | 15 | 15 | 20 | 20 | 20 | 20 |
| | | **7.7 kW** | 20 | 20 | 20 | 20 | 20 | 20 | 20 | 20 |
| | | **11.5 kW** | 25 | 25 | 25 | 25 | 25 | 25 | 25 | 25 |
| | | **17.2 kW** | - - - | - - - | 35 | 35 | 35 | 35 | 35 | 35 |
| | | **23 kW** | - - - | - - - | - - - | - - - | - - - | - - - | 45 | 45 |
| [3] Minimum Circuit Ampacity | Unit+ Electric Heat and (1) 0.25 kW Power Exhaust | **3.8 kW** | 10 | 10 | 10 | 11 | 14 | 15 | - - - | - - - |
| | | **5.7 kW** | 13 | 14 | 13 | 14 | 14 | 15 | 14 | 15 |
| | | **7.7 kW** | 16 | 17 | 16 | 17 | 17 | 18 | 17 | 18 |
| | | **11.5 kW** | 23 | 23 | 23 | 23 | 23 | 25 | 23 | 25 |
| | | **17.2 kW** | - - - | - - - | 33 | 33 | 33 | 34 | 33 | 34 |
| | | **23 kW** | - - - | - - - | - - - | - - - | - - - | - - - | 43 | 44 |

## ELECTRIC HEAT ACCESSORIES

| | | | | | | | | | |
|---|---|---|---|---|---|---|---|---|---|
| Unit Fuse Block | Unit Only | **10A29** | **10A29** | **10A29** | **10A29** | **10A29** | **10A29** | **10A29** | **10A29** |
| | Unit + Power Exhaust | **10A29** | **10A29** | **10A29** | **10A29** | **10A29** | **10A29** | **10A29** | **10A29** |

[1] Extremes of operating range are plus and minus 10% of line voltage.

[2] Heating, Air Conditioning, Refrigeration type breaker or fuse.

[3] Refer to local electrical code to determine wire, fuse and disconnect size requirements.

## ELECTRICAL DATA - ZCB

| | | ZCB036S4 | | ZCB048S4 | | ZCB060S4 | |
|---|---|---|---|---|---|---|---|
| [1] **Voltage - 50hz with Neutral** | | **380/420V - 3 Ph** | | **380/420V - 3 Ph** | | **380/420V - 3 Ph** | |
| Compressor | Rated Load Amps | 4 | | 5.5 | | 8 | |
| | Locked Rotor Amps | 31 | | 37 | | 59 | |
| Outdoor Fan Motor | Full Load Amps | 0.9 | | 0.9 | | 0.9 | |
| Power Exhaust (1) 0.25 kW | Full Load Amps | 0.6 | | 0.6 | | 0.6 | |
| Indoor Blower Motor | kW | 0.62 | 0.93 | 0.62 | 0.93 | 0.93 | 1.24 |
| | Full Load Amps | 1.6 | 2 | 1.6 | 2 | 2 | 2.9 |
| [2] Maximum Overcurrent Protection | Unit Only | 15 | 15 | 15 | 15 | 20 | 20 |
| | With (1) 0.25 kW Power Exhaust | 15 | 15 | 15 | 15 | 20 | 20 |
| [3] Minimum Circuit Ampacity | Unit Only | 8 | 8 | 10 | 10 | 13 | 14 |
| | With (1) 0.25 kW Power Exhaust | 9 | 9 | 10 | 11 | 14 | 15 |

## ELECTRIC HEAT DATA

| | | | | | | | | |
|---|---|---|---|---|---|---|---|---|
| **Electric Heat Voltage** | | | **420V** | **420V** | **420V** | **420V** | **420V** | **420V** |
| [2] Maximum Overcurrent Protection | Unit+ Electric Heat | **3.8 kW** | 15 | 15 | 15 | 15 | 20 | 20 |
| | | **5.7 kW** | 15 | 15 | 15 | 15 | 20 | 20 |
| | | **7.7 kW** | 20 | 20 | 20 | 20 | 20 | 20 |
| | | **11.5 kW** | 25 | 25 | 25 | 25 | 25 | 25 |
| | | **17.2 kW** | - - - | - - - | 35 | 35 | 35 | 35 |
| [3] Minimum Circuit Ampacity | Unit+ Electric Heat | **3.8 kW** | 9 | 10 | 10 | 10 | 13 | 14 |
| | | **5.7 kW** | 12 | 13 | 12 | 13 | 13 | 14 |
| | | **7.7 kW** | 16 | 16 | 16 | 16 | 16 | 17 |
| | | **11.5 kW** | 22 | 23 | 22 | 23 | 23 | 24 |
| | | **17.2 kW** | - - - | - - - | 32 | 33 | 33 | 34 |
| [2] Maximum Overcurrent Protection | Unit+ Electric Heat and (1) 0.25 kW Power Exhaust | **3.8 kW** | 15 | 15 | 15 | 15 | 20 | 20 |
| | | **5.7 kW** | 15 | 15 | 15 | 15 | 20 | 20 |
| | | **7.7 kW** | 20 | 20 | 20 | 20 | 20 | 20 |
| | | **11.5 kW** | 25 | 25 | 25 | 25 | 25 | 25 |
| | | **17.2 kW** | - - - | - - - | 35 | 35 | 35 | 35 |
| [3] Minimum Circuit Ampacity | Unit+ Electric Heat and (1) 0.25 kW Power Exhaust | **3.8 kW** | 10 | 10 | 10 | 11 | 14 | 15 |
| | | **5.7 kW** | 13 | 14 | 13 | 14 | 14 | 15 |
| | | **7.7 kW** | 16 | 17 | 16 | 17 | 17 | 18 |
| | | **11.5 kW** | 23 | 23 | 23 | 23 | 23 | 25 |
| | | **17.2 kW** | - - - | - - - | 33 | 33 | 33 | 34 |

## ELECTRIC HEAT ACCESSORIES

| | | | | | | | |
|---|---|---|---|---|---|---|---|
| Unit Fuse Block | Unit Only | **10A29** | **10A29** | **10A29** | **10A29** | **10A29** | **10A29** |
| | Unit + Power Exhaust | **10A29** | **10A29** | **10A29** | **10A29** | **10A29** | **10A29** |

[1] Extremes of operating range are plus and minus 10% of line voltage.

[2] Heating, Air Conditioning, Refrigeration type breaker or fuse.

[3] Refer to local electrical code to determine wire, fuse and disconnect size requirements.

## ELECTRIC HEAT CAPACITIES

| Input Voltage | 3.8 kW | | | 5.7 kW | | | 7.7 kW | | |
|---|---|---|---|---|---|---|---|---|---|
| | No of Stages | kW input | Btuh Output | No of Stages | kW input | Btuh Output | No of Stages | kW input | Btuh Output |
| 380 | 1 | 3.1 | 10 700 | 1 | 4.7 | 16 000 | 1 | 6.3 | 21 400 |
| 400 | 1 | 3.5 | 11 800 | 1 | 5.2 | 17 800 | 1 | 6.9 | 23 700 |
| 420 | 1 | 3.8 | 13 100 | 1 | 5.7 | 19 600 | 1 | 7.7 | 26 100 |
| **Input Voltage** | **11.5 kW** | | | **17.2 kW** | | | **23 kW** | | |
| | **No of Stages** | **kW input** | **Btuh Output** | **No of Stages** | **kW input** | **Btuh Output** | **No of Stages** | **kW input** | **Btuh Output** |
| 380 | 1 | 9.4 | 32 100 | 1 | 14.1 | 48 100 | 1 | 18.8 | 64 200 |
| 400 | 1 | 10.4 | 35 500 | 1 | 15.6 | 53 300 | 1 | 20.9 | 71 200 |
| 420 | 1 | 11.5 | 39 200 | 1 | 17.2 | 58 800 | 1 | 23.0 | 78 500 |

## UNIT CLEARANCES - MM (INCHES)

### UNIT WITH DOWNFLOW ECONOMIZER

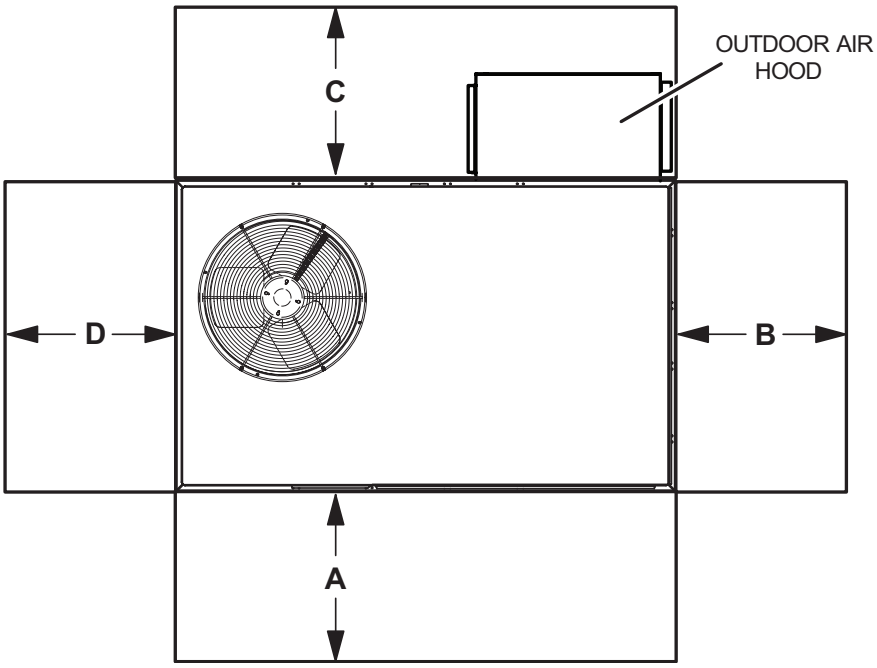


### UNIT WITH HORIZONTAL ECONOMIZER

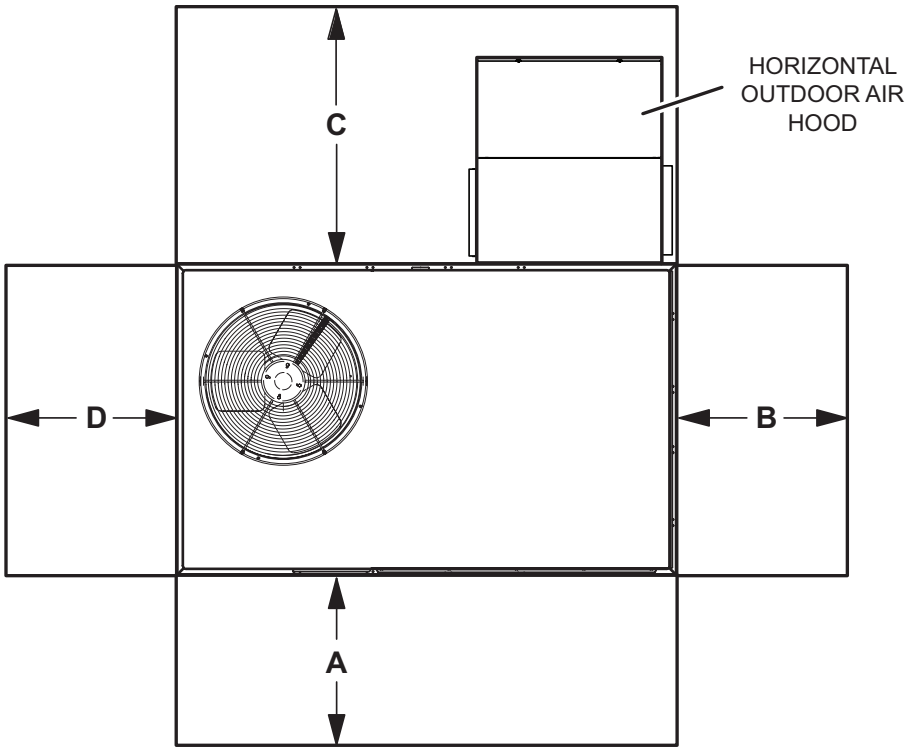


| [1] Unit Clearance | A | | B | | C Downflow | | C Horizontal | | D | | Top Clearance |
|---|---|---|---|---|---|---|---|---|---|---|---|
| | mm | in. | mm | in. | mm | in. | mm | in. | mm | in. | |
| **Service Clearance** | 914 | 36 | 914 | 36 | 914 | 36 | 1524 | 60 | 914 | 36 | **Unobstructed** |
| **Minimum Operation Clearance** | 914 | 36 | 914 | 36 | 914 | 36 | 1524 | 60 | 914 | 36 | |

NOTE - Entire perimeter of unit base requires support when elevated above the mounting surface.

[1] Service Clearance - Required for removal of serviceable parts.
Minimum Operation Clearance - Required clearance for proper unit operation.

## OUTDOOR SOUND DATA

| Unit Model No. | Octave Band Linear Sound Power Levels dB, re $10^{-12}$ Watts - Center Frequency - Hz | | | | | | | [1] Sound Rating Number (SRN) (dBA) |
|---|---|---|---|---|---|---|---|---|
| | 125 | 250 | 500 | 1000 | 2000 | 4000 | 8000 | |
| **ZCA036** | 81 | 78 | 77 | 72 | 68 | 66 | 61 | 77 |
| **ZCA048** | 84 | 80 | 79 | 74 | 70 | 67 | 63 | 80 |
| **ZCA060** | 86 | 82 | 82 | 78 | 74 | 68 | 65 | 83 |
| **ZCB036** | 81 | 78 | 77 | 72 | 68 | 66 | 61 | 77 |
| **ZCB048** | 84 | 80 | 79 | 74 | 70 | 67 | 63 | 80 |
| **ZCB060** | 80 | 76 | 76 | 73 | 68 | 66 | 64 | 78 |
| **ZCA072** | 88 | 85 | 84 | 79 | 72 | 66 | 64 | 84 |

[1] Sound Rating Number according to ANSI/AHRI Standard 270-2008. “SRN” is the overall A-Weighted Sound Power Level, (LWA), dB (100 Hz to 10,000 Hz).

## WEIGHT DATA

| Model Number | Net | | | | Shipping | | | |
|---|---|---|---|---|---|---|---|---|
| | Base | | Max. | | Base | | Max. | |
| | kg | lbs. | kg | lbs. | kg | lbs. | kg | lbs. |
| **ZCA036S** | 205 | 451 | 228 | 502 | 207 | 456 | 230 | 507 |
| **ZCB036S** | 215 | 474 | 247 | 544 | 217 | 479 | 293 | 645 |
| **ZCA048S** | 211 | 465 | 234 | 516 | 213 | 470 | 236 | 521 |
| **ZCB048S** | 219 | 483 | 251 | 553 | 221 | 448 | 253 | 558 |
| **ZCA060S** | 225 | 497 | 249 | 550 | 228 | 502 | 252 | 555 |
| **ZCB060S** | 258 | 568 | 290 | 640 | 260 | 573 | 293 | 645 |
| **ZCA072S** | 258 | 568 | 282 | 621 | 260 | 573 | 284 | 626 |

Base Unit - The unit with NO OPTIONS.
Max. Unit - The unit with ALL OPTIONS Installed. (Economizer, etc.)

## OPTIONS / ACCESSORIES

| | | Shipping Weights | |
|---|---|---|---|
| | | kg | lbs. |
| **ECONOMIZER** | | | |
| **Economizer** | | | |
| Economizer, Includes Outdoor Air Hood and Barometric Relief Dampers with Hood | Downflow | 34 | 75 |
| | Horizontal | 46 | 102 |
| **OUTDOOR AIR** | | | |
| **Outdoor Air Dampers** | | | |
| Motorized | | 14 | 30 |
| Manual | | 10 | 23 |
| **POWER EXHAUST** | | | |
| Standard Static | Downflow | 24 | 54 |
| | Horizontal | 19 | 41 |
| **ELECTRIC HEAT** | | | |
| 3.8 kW | | 11 | 25 |
| 5.7 kW | | 12 | 26 |
| 7.7 kW | | 12 | 27 |
| 11.5 kW | | 12 | 27 |
| 17.2 kW | | 13 | 29 |
| 23 kW | | 14 | 30 |
| **ROOF CURBS** | | | |
| **Hybrid Roof Curbs, Downflow** | | | |
| 203 mm | | 29 | 63 |
| 356 mm | | 38 | 83 |
| 457 mm | | 42 | 93 |
| 610 mm | | 51 | 113 |
| **CEILING DIFFUSERS** | | | |
| Step-Down | RTD9-65-R | 30 | 67 |
| | RTD-65-R | 40 | 88 |
| Flush | FD9-65-R | 17 | 37 |
| | FD11-95 | 34 | 75 |

## DIMENSIONS - UNIT - MM (INCHES) - ZCA

| Model No. | CORNER WEIGHTS | | | | | | | | | | | | | | | | CENTER OF GRAVITY | | | | | | | |
|---|---|---|---|---|---|---|---|---|---|---|---|---|---|---|---|---|---|---|---|---|---|---|---|---|
| | AA | | | | BB | | | | CC | | | | DD | | | | EE | | | | FF | | | |
| | Base | | Max. | | Base | | Max. | | Base | | Max. | | Base | | Max. | | Base | | Max. | | Base | | Max. | |
| | kg | lbs. | kg | lbs. | kg | lbs. | kg | lbs. | kg | lbs. | kg | lbs. | kg | lbs. | kg | lbs. | mm | in. | mm | in. | mm | in. | mm | in. |
| **036** | 53 | 116 | 60 | 132 | 49 | 107 | 61 | 135 | 50 | 109 | 54 | 119 | 54 | 118 | 53 | 116 | 1003 | 39.5 | 953 | 37.5 | 591 | 23.25 | 635 | 25 |
| **048** | 54 | 120 | 61 | 135 | 50 | 110 | 63 | 139 | 51 | 113 | 55 | 122 | 55 | 122 | 54 | 119 | 1003 | 39.5 | 953 | 37.5 | 591 | 23.25 | 635 | 25 |
| **060** | 58 | 128 | 65 | 144 | 54 | 118 | 67 | 148 | 55 | 121 | 59 | 130 | 59 | 131 | 58 | 127 | 1003 | 39.5 | 953 | 37.5 | 591 | 23.25 | 635 | 25 |
| **072** | 62 | 136 | 68 | 149 | 62 | 136 | 68 | 149 | 67 | 148 | 73 | 162 | 67 | 148 | 73 | 162 | 965 | 38 | 914 | 36 | 572 | 22.5 | 610 | 24 |

Base Unit - The unit with NO OPTIONS.

Max. Unit - The unit with ALL OPTIONS Installed. (Economizer, largest blower motor, etc.).

**BOTTOM POWER ENTRY**
Holes required for Optional Bottom Power Entry Kit

| | Threaded Conduit Fittings (Provided in Kit) | Wire Use | Hole Diameter Required in Unit Base (Max.) |
|---|---|---|---|
| **A** | 1/2 | ACC | 23 (7/8) |
| **B** | 1/2 | 24V | 23 (7/8) |
| **C** | 3/4 | POWER | 29 (1-1/8) |

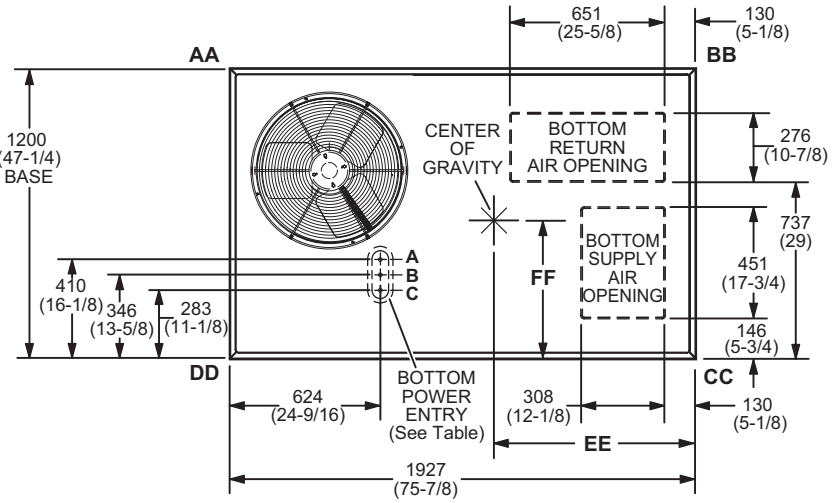


**TOP VIEW (Base)**

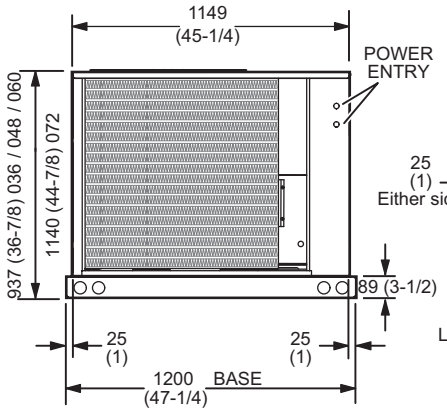


**END VIEW**

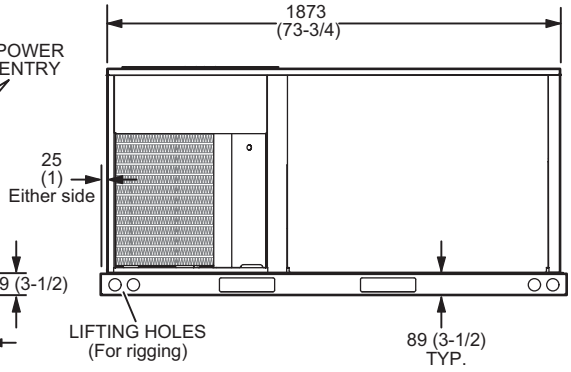


**FRONT VIEW**

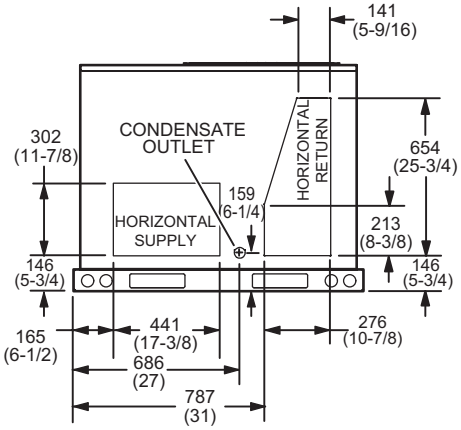


**END VIEW**

## DIMENSIONS - UNIT - MM (INCHES) - ZCB

| Model No. | CORNER WEIGHTS | | | | | | | | | | | | | | | | CENTER OF GRAVITY | | | | | | | |
|---|---|---|---|---|---|---|---|---|---|---|---|---|---|---|---|---|---|---|---|---|---|---|---|---|
| | AA | | | | BB | | | | CC | | | | DD | | | | EE | | | | FF | | | |
| | Base | | Max. | | Base | | Max. | | Base | | Max. | | Base | | Max. | | Base | | Max. | | Base | | Max. | |
| | kg | lbs. | kg | lbs. | kg | lbs. | kg | lbs. | kg | lbs. | kg | lbs. | kg | lbs. | kg | lbs. | mm | in. | mm | in. | mm | in. | mm | in. |
| **036** | 53 | 117 | 61 | 134 | 51 | 112 | 59 | 129 | 54 | 120 | 63 | 138 | 57 | 125 | 65 | 143 | 984 | 38.75 | 933 | 36.75 | 578 | 22.75 | 622 | 24.5 |
| **048** | 54 | 119 | 62 | 136 | 52 | 115 | 59 | 131 | 55 | 122 | 64 | 140 | 58 | 127 | 66 | 145 | 984 | 38.75 | 933 | 36.75 | 578 | 22.75 | 622 | 24.5 |
| **060** | 71 | 156 | 80 | 176 | 64 | 140 | 72 | 158 | 59 | 129 | 66 | 145 | 65 | 143 | 73 | 161 | 1016 | 40 | 965 | 38 | 622 | 24.5 | 660 | 26 |

Base Unit - The unit with NO OPTIONS.

Max. Unit - The unit with ALL OPTIONS Installed. (Economizer, largest blower motor, etc.).

**BOTTOM POWER ENTRY**
Holes required for Optional Bottom Power Entry Kit

| | Threaded Conduit Fittings (Provided in Kit) | Wire Use | Hole Diameter Required in Unit Base (Max.) |
|---|---|---|---|
| **A** | 1/2 | ACC | 23 (7/8) |
| **B** | 1/2 | 24V | 23 (7/8) |
| **C** | 3/4 | POWER | 29 (1-1/8) |

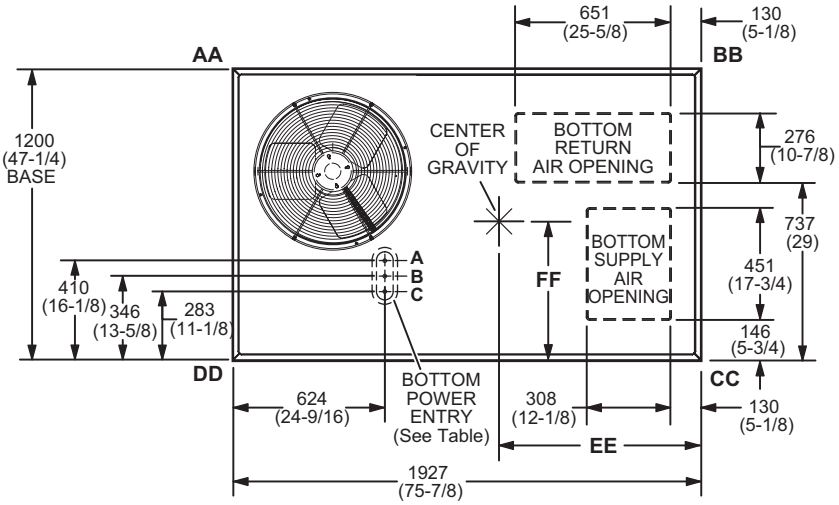


**TOP VIEW (Base)**

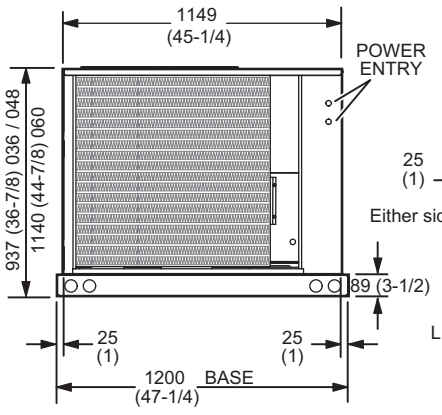


**END VIEW**

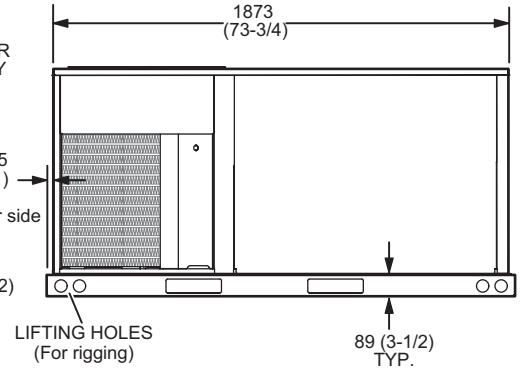


**FRONT VIEW**

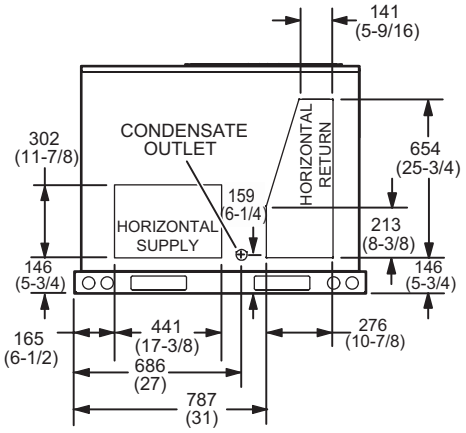


**END VIEW**

## OUTDOOR AIR HOOD DETAIL FOR OPTIONAL ECONOMIZER (Downflow Applications)

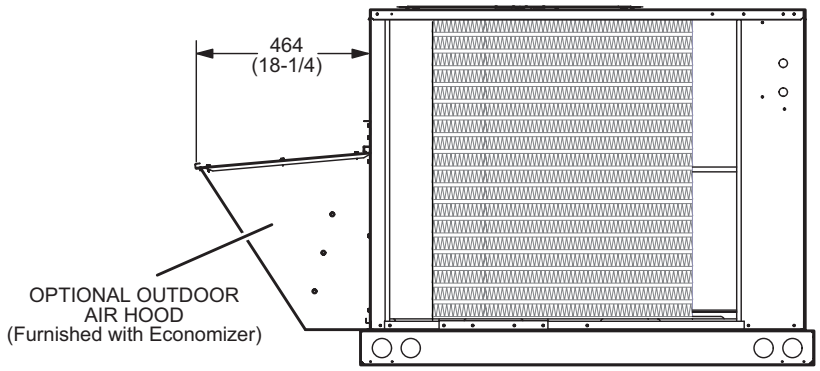


SIDE VIEW

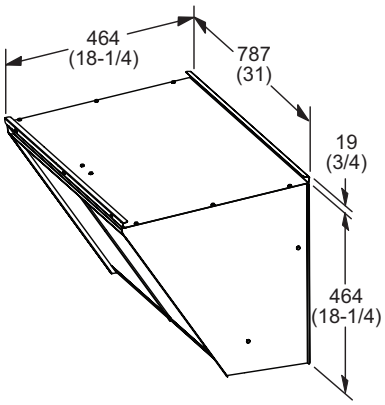


## OUTDOOR AIR DAMPER HOOD DETAIL FOR OPTIONAL MANUAL OR MOTORIZED OUTDOOR AIR DAMPERS (Downflow or Horizontal Applications)

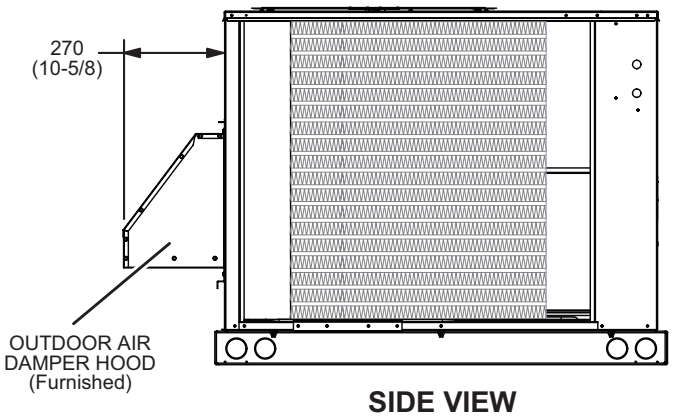


SIDE VIEW

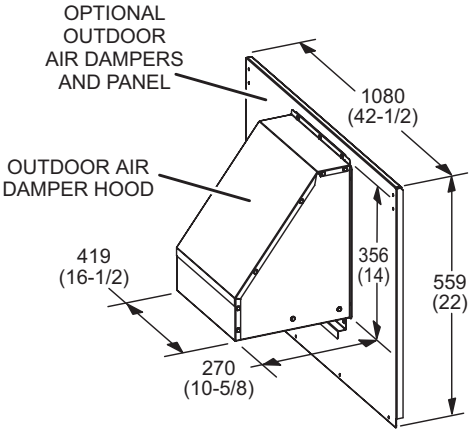

**OUTDOOR AIR HOOD DETAIL WITH OPTIONAL ECONOMIZER AND BAROMETRIC RELIEF DAMPERS (Horizontal Applications)**

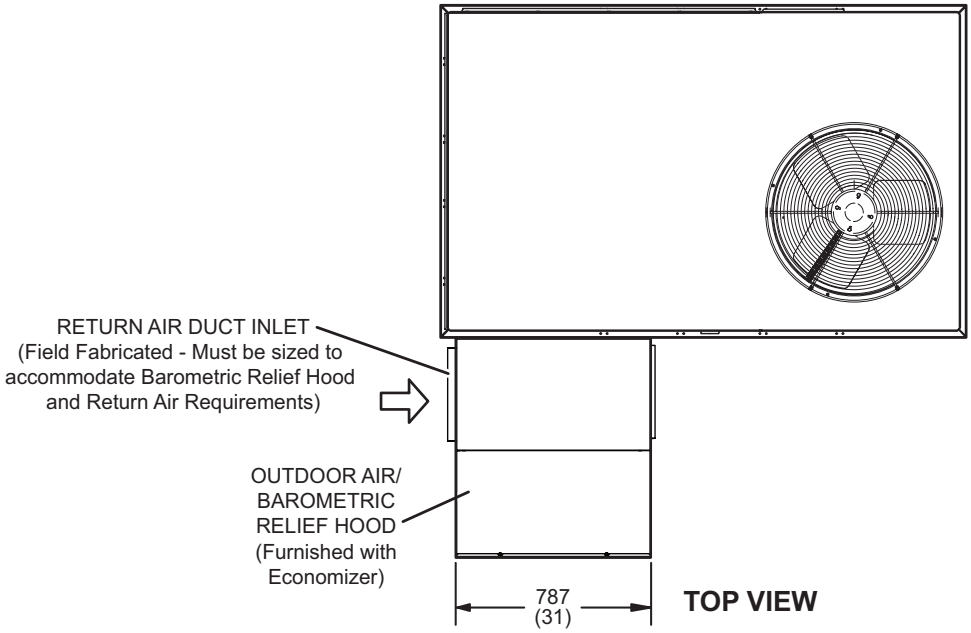


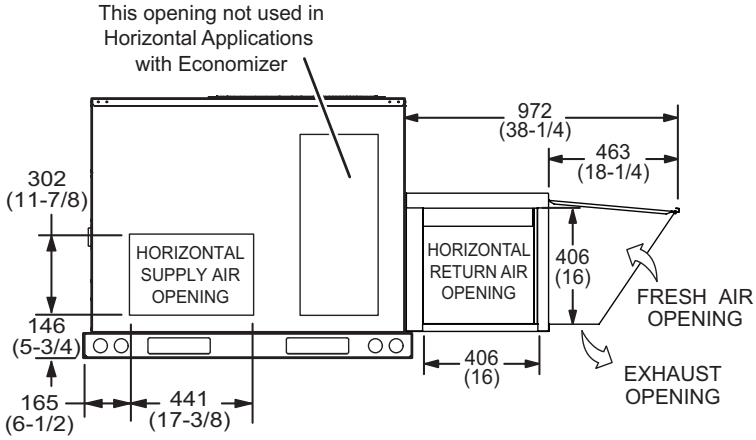


**END VIEW**

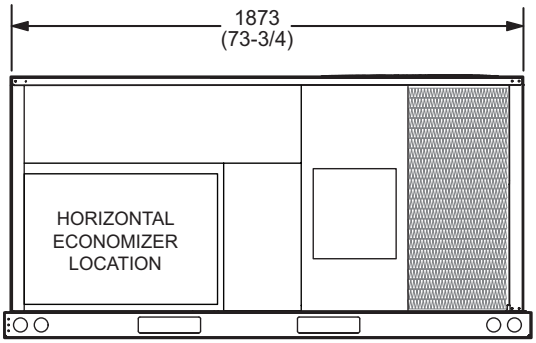


**BACK VIEW**

Note - Return Air Duct and Transition must be supported.

## HYBRID ROOF CURBS - DOUBLE DUCT OPENING

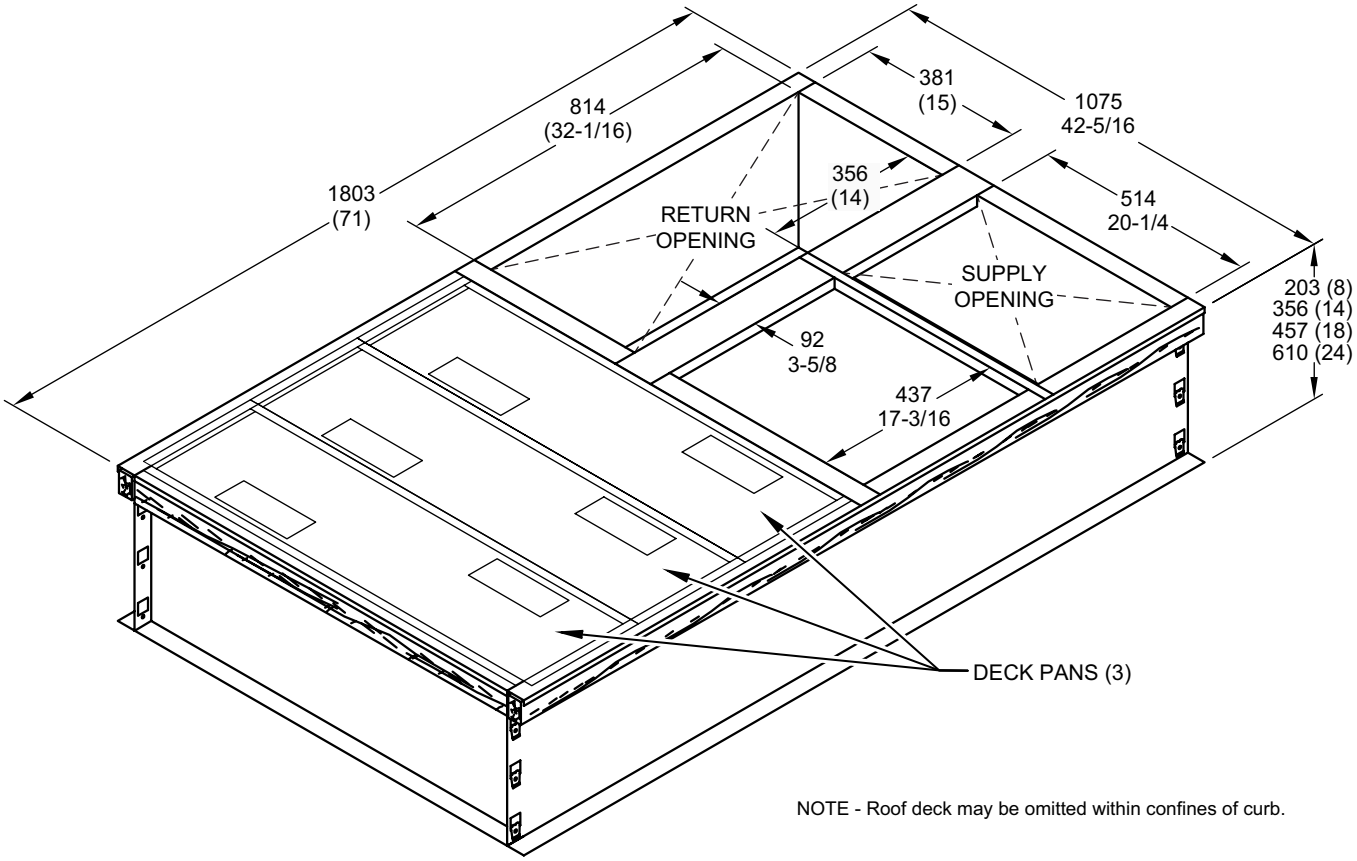


NOTE - Roof deck may be omitted within confines of curb.

### TYPICAL FLASHING DETAIL FOR ROOF CURB

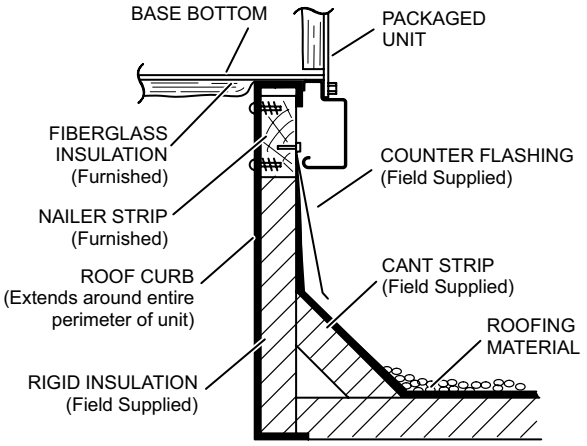


### DETAIL ROOF CURB

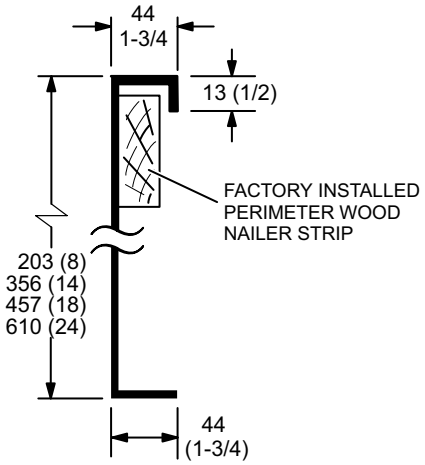

## COMBINATION CEILING SUPPLY AND RETURN DIFFUSERS

### STEP-DOWN CEILING DIFFUSER

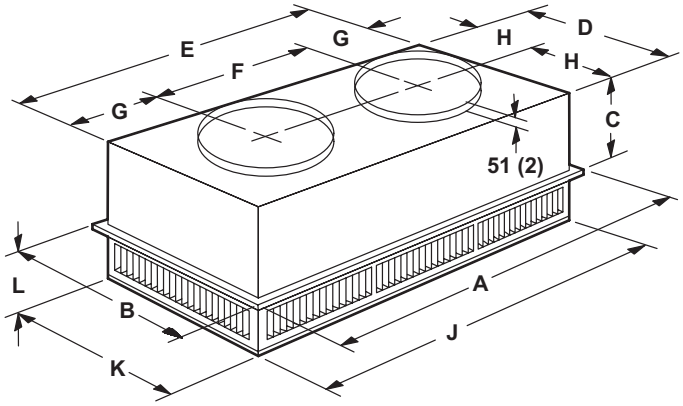


| Model Number | | RTD9-65 | RTD11-95 |
|---|---|---|---|
| A | mm | 1159 | 1159 |
| | in. | 47-5/8 | 47-5/8 |
| B | mm | 600 | 752 |
| | in. | 23-5/8 | 29-5/8 |
| C | mm | 289 | 365 |
| | in. | 11-3/8 | 14-3/8 |
| D | mm | 546 | 699 |
| | in. | 21-1/2 | 27-1/2 |
| E | mm | 1156 | 1158 |
| | in. | 45-1/2 | 45-1/2 |
| F | mm | 572 | 572 |
| | in. | 22-1/2 | 22-1/2 |
| G | mm | 292 | 292 |
| | in. | 11-1/2 | 11-1/2 |
| H | mm | 273 | 349 |
| | in. | 10-3/4 | 13-3/4 |
| J | mm | 1156 | 1156 |
| | in. | 45-1/2 | 45-1/2 |
| K | mm | 546 | 699 |
| | in. | 21-1/2 | 27-1/2 |
| L | mm | 181 | 206 |
| | in. | 7-1/8 | 8-1/8 |
| Duct Size | mm | 457 round | 508 round |
| | in. | 18 round | 20 round |

### FLUSH CEILING DIFFUSER

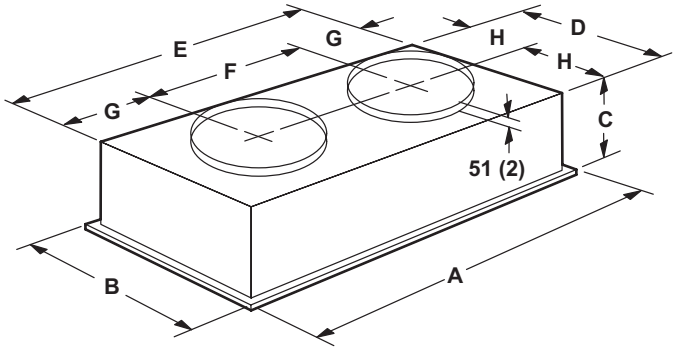


| Model Number | | FD9-65 | FD11-95 |
|---|---|---|---|
| A | mm | 1159 | 1159 |
| | in. | 47-5/8 | 47-5/8 |
| B | mm | 600 | 752 |
| | in. | 23-5/8 | 29-5/8 |
| C | mm | 343 | 422 |
| | in. | 13-1/2 | 16-5/8 |
| D | mm | 533 | 686 |
| | in. | 21 | 27 |
| E | mm | 1143 | 1143 |
| | in. | 45 | 45 |
| F | mm | 572 | 572 |
| | in. | 22-1/2 | 22-1/2 |
| G | mm | 286 | 286 |
| | in. | 11-1/4 | 11-1/4 |
| H | mm | 267 | 343 |
| | in. | 10-1/2 | 13-1/2 |
| Duct Size | mm | 457 round | 20 round |
| | in. | 18 round | 508 round |

## REVISIONS

| Section | Description |
|---|---|
| Options / Accessories | Updated model and catalog numbers for Standard Economizer (Downflow and Horizontal) and High Performance Economizer (Downflow and Horizontal). |

**Visit us at www.allied-commercial.com**

**For the latest technical information, visit us at www.allied-commercial.com**

**Contact us at 1-800-448-5872**

NOTE - Due to Allied Commercial ongoing commitment to quality, Specifications, Ratings and Dimensions subject to change without notice and without incurring liability.
Improper installation, adjustment, alteration, service or maintenance can cause property damage or personal injury.
Installation and service must be performed by a qualified installer and servicing agency.

©2016 Allied Air Enterprises LLC, a Lennox International Inc. Company