SERVICE PARTS LIST

BULLETIN NO. PN0000859

SPECIFY CATALOG NO. AND SERIAL NO. WHEN ORDERING PARTS			REVISED BULLETIN	DATE
M12™ 75' Drain Camera				Feb. 2025
CATALOG NO.	**3154-20**	SERIAL NO. **P01A**	WIRING INSTRUCTION	

FIG.	PART NO.	DESCRIPTION OF PART	NO. REQ.
1	06-82-4003	M4 x 16mm Pan Hd. T-20 Screw	(29)
28	----------	Battery Housing (Back)	(1)
29	----------	Sealing Tray Gasket	(1)
33	----------	Shaft Cap (Top)	(1)
35	----------	E-Ring	(1)
36	----------	Flat Washer	(1)
37	----------	Shaft Cap (Bottom)	(1)
39	----------	Drum Shaft	(1)
40	----------	O-Ring	(1)
43	----------	Pushrod Cable Assembly	(1)
44	----------	Drum Housing	(1)
45	----------	Battery Cover (Right)	(1)
46	----------	Terminal Block Assembly	(1)
47	----------	Battery Cover (Left)	(1)
48	06-82-0032	M4 x 12mm Pan Hd. T-20 Screw	(4)
49	----------	Positioning Column	(1)
50	----------	Battery Spring	(3)
51	----------	Battery Holder	(1)
52	----------	Battery Rotate Pin	(1)
53	----------	Rubber Pad (Large)	(1)
54	----------	Rubber Pad (Small)	(1)
55	----------	Main Tray Assembly	(1)
56	----------	Battery Door Pin	(1)
57	----------	Counter Board	(1)
58	----------	PCBA Holder	(1)
59	----------	Main Housing	(1)
60	45-60-0100	Rubber Feet	(8)
61	----------	M12 Battery Housing Clip	(1)
62	----------	Cable Hold Down	(1)
65	----------	Battery Door Buckle	(3)
66	----------	Latch Pin	(3)
67	----------	Battery Door Latch	(3)
68	----------	Handle	(1)
69	----------	Handle Pin	(2)
70	----------	Locker Spring	(1)
71	----------	Locker	(1)
74	----------	Foam Speaker Pad	(2)
76	06-82-0226	M3 x 16mm Pan Hd. T-10 Screw	(24)
78	06-82-1439	M3 x 12mm T-10 Screw	(3)
82	05-81-0005	M3 x 11mm T-10 Taptite Screw	(3)
83	12-20-0554	Service Nameplate	(1)
84	----------	Logo Label	(1)
85	10-15-9731	Tool ID Label	(1)
87	05-74-0501	M3 x 12mm T-10 Pan Hd. Screw	(3)
89	48-53-3154	Cable Assembly w/Drum Housing	(1)
90	23-74-3154	Battery Terminal Kit	(1)
91	14-46-0823	Battery Lid Kit	(1)
93	14-46-0821	Bottom Housing Kit	(1)
96	14-20-0342	Counter PCBA w/ Hold Down	(1)
97	14-46-0824	Latch Kit	(3)
99	31-17-0101	Cable Hold Down Kit	(1)
104	14-46-0529	Drum Shaft Kit	(1)

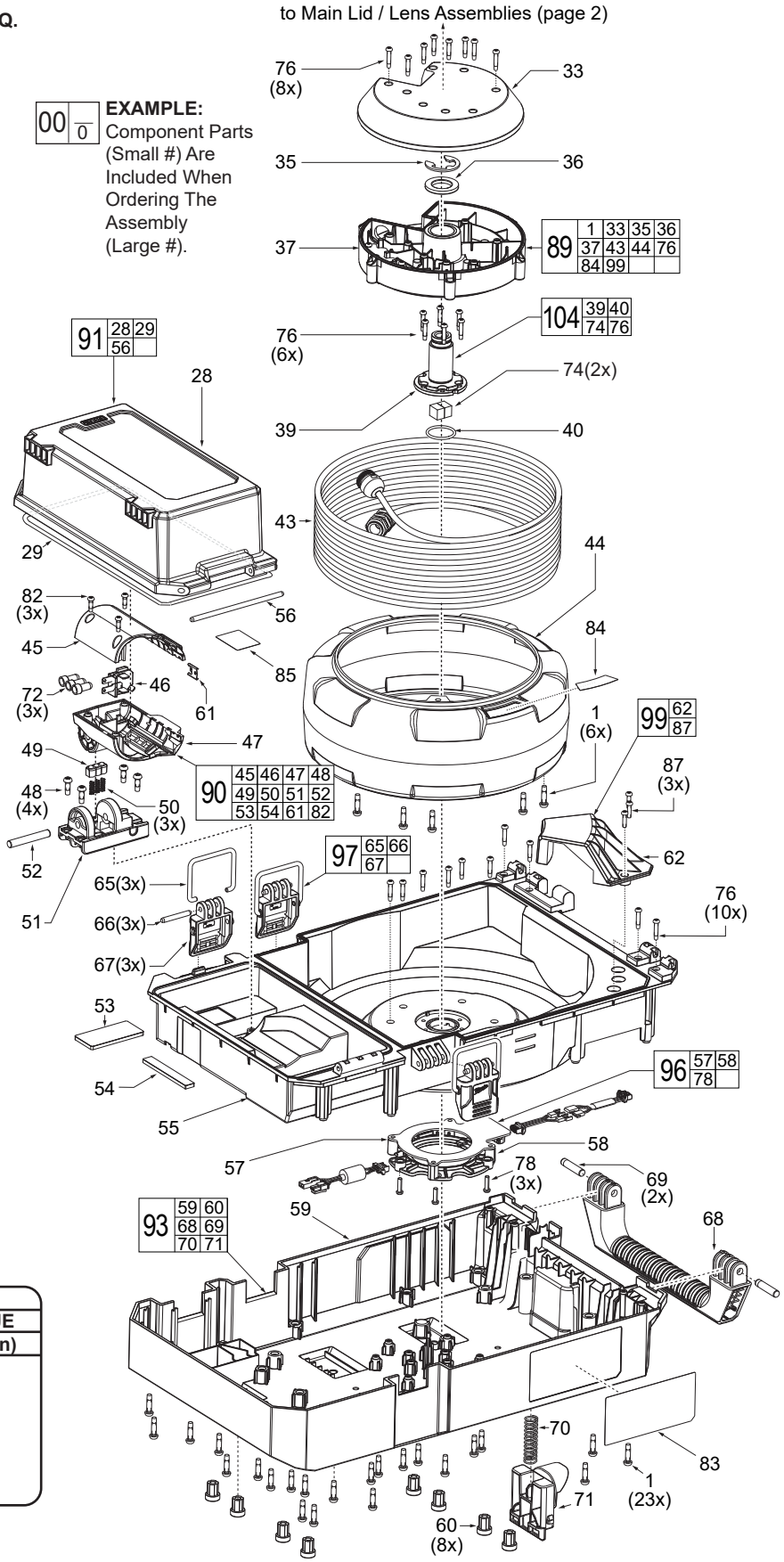

SCREW TORQUE SPECIFICATIONS

FIG.	PART NO.	WHERE USED	SEAT TORQUE (kgf-cm)	SEAT TORQUE (lb-in)
1	06-82-4003	Main Housing - Bottom	10±1	9±1
48	06-82-0032	Battery Terminal Assy.	7±1	6±1
76	06-82-0226	Main Housing - Bottom	6±1	5±1
78	06-82-0907	Counter PCBA Assy.	6±1	5±1
82	05-81-0005	Battery Terminal Assy.	6±1	5±1
87	05-74-0501	Cable Hold Down	6±1	5±1

MILWAUKEE TOOL • www.milwaukeetool.com
13135 W. LISBON RD., BROOKFIELD, WI 53005

Drwg. 1

MAIN LID / LENS ASSEMBLY

00 | 0 **EXAMPLE:**
Component Parts (Small #)
Are Included When Ordering
The Assembly (Large #).

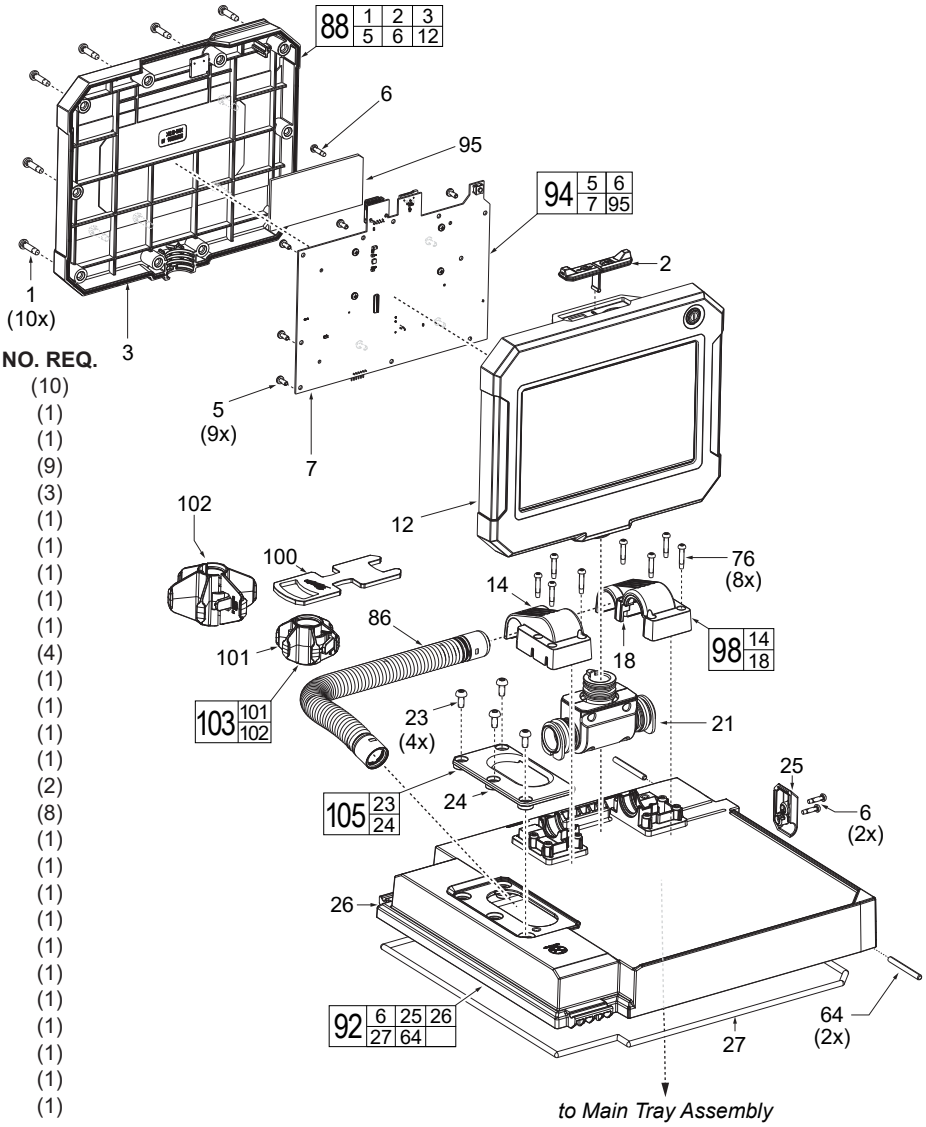

FIG.	PART NO.	DESCRIPTION OF PART	NO. REQ.
1	06-82-4003	M4 x 16mm Pan Hd. T-20 Screw	(10)
2	22-68-0125	USB Cover	(1)
3	----------	Head - Back	(1)
5	06-82-0027	M3 x 7mm Pan Hd. T-10 Screw	(9)
6	06-83-1001	M3 x 1.058 Pan Hd. T-10 Screw	(3)
7	----------	PCB Assembly	(1)
12	----------	Head - Front	(1)
14	----------	Camera Set Casing (Right)	(1)
18	----------	Camera Set Casing (Left)	(1)
21	----------	Connecting Base	(1)
23	05-81-1030	Feed Tube Pan Hd. Screw	(4)
24	----------	Feed Tube	(1)
25	----------	Wire Routing Cover	(1)
26	----------	Storage Box Door Assembly	(1)
27	----------	Sealing Tray Gasket	(1)
64	----------	Lid Rotate Pin	(2)
76	06-82-0226	M3 x 16mm Pan Hd. T-10 Screw	(8)
86	48-53-3155	18mm 75ft. Camera Module (Accy)	(1)
88	23-28-0105	Lens Assembly	(1)
92	31-15-0221	Main Lid Assembly	(1)
94	14-20-0341	Main PCBA Assembly	(1)
95	----------	Thermal Pad	(1)
98	31-17-0100	Cable Holder Kit	(1)
100	45-96-0081	Camera Wrench	(1)
101	----------	Small D18 Skid	(1)
102	----------	Large D18 Skid	(1)
103	48-53-3156	D18 Skid Kit	(1)
105	14-46-0822	Feed Tube Kit	(1)

SCREW TORQUE SPECIFICATIONS

FIG.	PART NO.	WHERE USED	SEAT TORQUE (kgf-cm)	SEAT TORQUE (lb-in)
1	06-82-4003	Lens Assembly - Back	16±1	14±1
5	06-82-0027	Main PCBA Assembly	4±1	3±1
6	06-83-1001	Main PCBA Assembly	6±1	5±1
23	05-81-1030	Feed Tube	8±1	7±1
76	06-82-0226	Cable Holder	6±1	5±1

GLUING / LUBRICATION INSTRUCTIONS

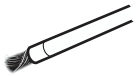

NOTE
Regarding parts to be glued: Apply a light coating of sealant to highlighted area inside of drum shaft (39) prior to installing two foam speaker pads (74). Reference the key below for glue type.

= 1598 Sealant

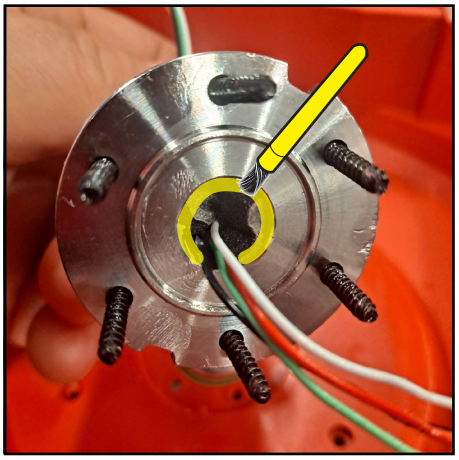

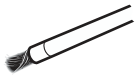

NOTE
Regarding parts to be lubricated: Apply a light coating of grease to drum shaft (39), shown highlighted, prior to installation of drum housing. Reference the key below for grease type.
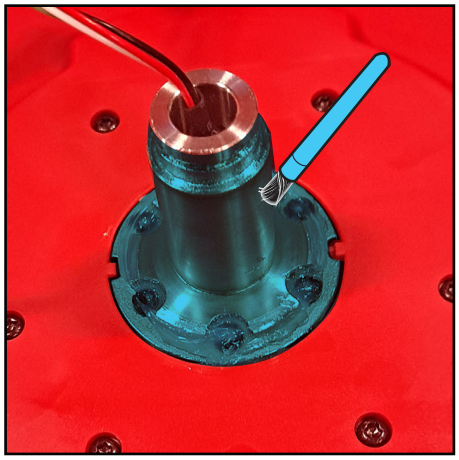
= Type "J" Grease, 49-08-4220