MOEN®

Specifications

FAUCET DESCRIPTION
- Metal construction with various finishes identified by suffix
- For use with S3371, 3/4" thermostatic valve (sold separately)
- Pairs with T4412 volume control valve trim and S3600 volume control valve (sold separately)

OPERATION
- Flow lever operates counterclockwise through a 90° arc with shut off at 6 o'clock and maximum flow at the 3 o'clock position, shut off in clockwise direction
- Temperature lever operates through a 340° arc with maximum cold at full clockwise rotation and maximum hot at full counterclockwise rotation
- Safety stop preset temperature at 105°F (41°C)
- Safety stop override allows maximum temperature at 120°F (49°C)
- Factory established temperature range from 70°F (21°C) to 120°F (49°C)

STANDARDS
- Third party certified to: ASME A112.18./CSA B-125.1, ASSE1016 and all applicable requirements referenced therein
- **ADA** for lever handle

WARRANTY
- Lifetime limited warranty against leaks, drips and finish defects to the original homeowner
- 10 year limited warranty when used in a multifamily installation
- 5 year limited warranty when used in a commercial installation

Visit www.moen.com/support for complete details and limitations

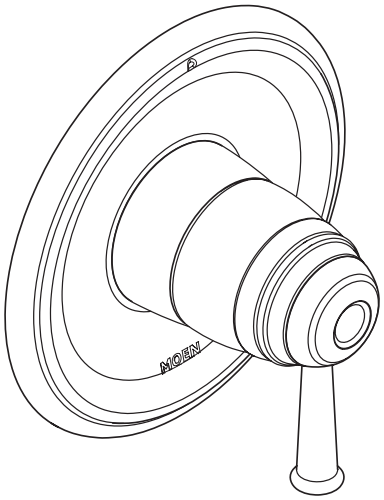

BELFIELD™
3/4" Thermostatic Shower Trim

Models: T4411 series - Valve Trim only

Valve Models: S3371 (sold separately)

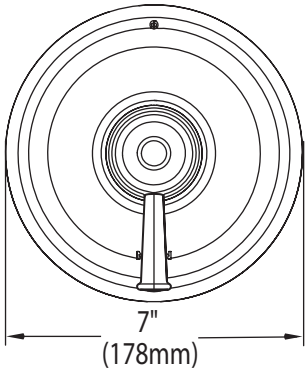

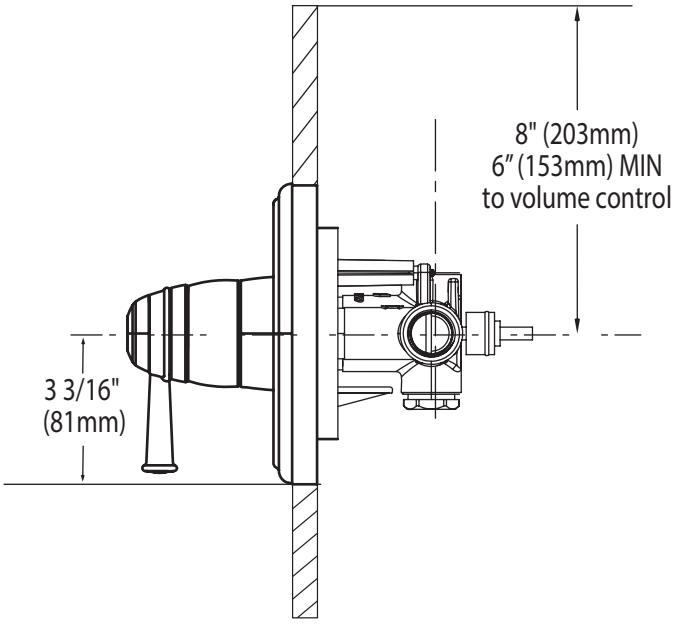

CRITICAL DIMENSIONS
(DO NOT SCALE)

FOR MORE INFORMATION CALL: 1-800-BUY-MOEN
www.moen.com

01/17/2019 SPC15355 500003350011
Released 01