LG
Life's Good

ENGLISH
FRANÇAIS
ESPAÑOL

INSTALLATION MANUAL

AIR CONDITIONER

Please read this installation manual completely before installing the product.
Installation work must be performed in accordance with the national wiring standards by authorized personnel only.
Please retain this installation manual for future reference after reading it thoroughly.

Auxiliary Heat Control (For Vertical Air Handling Unit)

ANEH033B1 / ANEH053B1 / ANEH083B2
ANEH103B2 / ANEH153B2 / ANEH203B2

www.lg.com

P/NO : MFL66300701

IMPORTANT!

Please read this instruction sheet completely before installing the product.

This air conditioning system meets strict safety and operating standards. As the installer or service person, it is an important part of your job to install or service the system so it operates safely and efficiently.

⚠ WARNING

- Installation or repairs made by unqualified persons can result in hazards to you and others. Installation MUST conform with local building codes or, in the absence of local codes, with the National Electrical Code NFPA 70/ANSI C1-1993 or current edition and Canadian Electrical Code Part1 CSA C.22.1.
- The information contained in the manual is intended for use by a qualified service technician familiar with safety procedures and equipped with the proper tools and test instruments.
- Failure to carefully read and follow all instructions in this manual can result in equipment malfunction, property damage, personal injury and/or death.

CAUTION: Improper installation, adjustment, alteration, service or maintenance can void the warranty. The weight of the condensing unit requires caution and proper handling procedures when lifting or moving to avoid personal injury. Use care to avoid contact with sharp or pointed edges.

Safety Precautions

- Always wear safety eye wear and work gloves when installing equipment.
- Never assume electrical power is disconnected. Check with meter and equipment.
- Keep hands out of fan areas when power is connected to equipment.
- R-410A causes frostbite burns.
- R-410A is toxic when burned.

NOTE TO INSTALLING DEALER: The Owners Instructions and Warranty are to be given to the owner or prominently displayed near the indoor Furnace/Air Handler Unit.

⚠ WARNING

When wiring:

Electrical shock can cause severe personal injury or death. Only a qualified, experienced electrician should attempt to wire this system.

- Do not supply power to the unit until all wiring and tubing are completed or reconnected and checked.
- Highly dangerous electrical voltages are used in this system. Carefully refer to the wiring diagram and these instructions when wiring. Improper connections and inadequate grounding can cause accidental injury or death.
- Ground the unit following local electrical codes.
- Connect all wiring tightly. Loose wiring may cause overheating at connection points and a possible fire hazard.

When transporting:

Be careful when picking up and moving the indoor and outdoor units. Get a partner to help, and bend your knees when lifting to reduce strain on your back. Sharp edges or thin aluminum fins on the air conditioner can cut your finger.

When installing...

... in a wall: Make sure the wall is strong enough to hold the unit's weight. It may be necessary to construct a strong wood or metal frame to provide added support.

... in a room: Properly insulate any tubing run inside a room to prevent "sweating" that can cause dripping and water damage to wall and floors.

... in moist or uneven locatinons: Use a raised concrete pad or concrete blocks provide a solid, level foundation for the outdoor unit. This prevents water damage and abnormal vibration.

... in an area with high winds: Securely anchor the outdoor unit down with bolts and a metal frame. Provide a suitable air baffle.

... in a snowy area(for Heat Pump Model): Install the outdoor unit on a raised platform that is higher than drifting snow. Provide snow vents.

When connecting refrigerant tubing

- Keep all tubing runs as short as possible.
- Use the flare method for connecting tubing.
- Check carefully for leaks before starting the test run.

When servicing

- Turn the power OFF at the main power box(mains) before opening the unit to check or repair electrical parts and wiring.
- Keep your fingers and clothing away from any moving parts.
- Clean up the site after you finish, remembering to check that no metal scraps or bits of wiring have been left inside the unit being serviced.

TABLE OF CONTENTS

1. Safety Precautions

To prevent injury to the user or other people and property damage, the following instructions must be followed.

■ Incorrect operation due to ignoring instruction will cause harm or damage. The seriousness is classified by the following indications.

⚠WARNING	This symbol indicates the possibility of death or serious injury.
⚠CAUTION	This symbol indicates the possibility of injury or damage.

■ Meanings of symbols used in this manual are as shown below.

⃠	**Be sure not to do.**
!	**Be sure to follow the instruction.**

⚠WARNING

Do not use a defective or underrated circuit breaker. Use this appliance on a dedicated circuit.

- There is risk of fire or electric shock.

For electrical work, contact the dealer, seller, a qualified electrician, or an Authorized Service Center.

- Do not disassemble or repair the product. There is risk of fire or electric shock.

Always ground the product.

- There is risk of fire or electric shock.

Install the panel and the cover of control box securely.

- There is risk of fire or electric shock.

Always install a dedicated circuit and breaker.

- Improper wiring or installation may cause fire or electric shock.

Use the correctly rated breaker or fuse.

- There is risk of fire or electric shock.

Do not modify or extend the power cable.

- There is risk of fire or electric shock.

If the installation isn't complete, electric shock or fire may occur, or death or injury can be caused.

If the capacity of the power circuit is insufficient or its installation wasn't done completely, this may cause electric shock, fire or etc..

When operating the machine (applying power to the machine), do not carry out any electric work and do not put hand or finger into it. This may cause electric shock, injury and death.

⚠CAUTION

Before installation, read this manual and carry out the works according to it.

Before installation, be sure to check all the included items. (However, be sure to use all kinds of certified products when purchasing the items other than those provided by LG at your local store.)

Be sure to carry out the earth work. (However, do not connect the unit to gas pipe, water pipe, a lightning rod and a phone earth line. In addition, if the earth wasn't completely done, this may cause electric shock and fire.)

2. Included Items

Model	Auxiliary Heat Control		
Item	Auxiliary Heat Control	Installation Manual	Screw
Q'ty	1	1	1
Figure	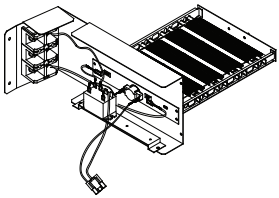	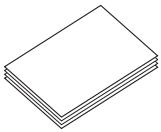	

(Unit : inch(mm))

Dimension

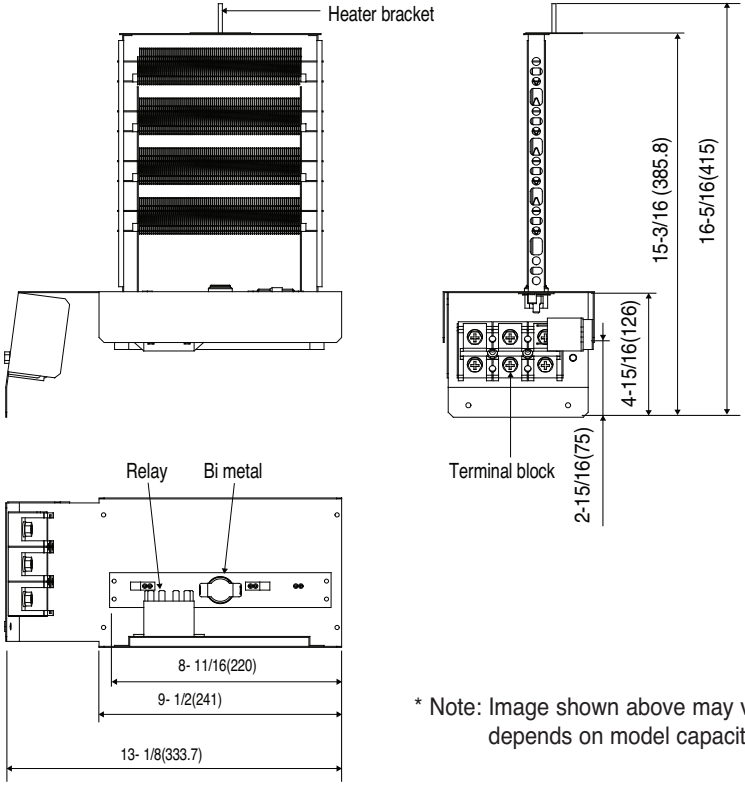

* Note: Image shown above may vary depends on model capacity.

Minimum airflow by heater capacity

■ Multi V

(Unit: CFM)

Capacity (kBtu/h (RT))	Heater Capacity (kW)			
	5	10	15	20
12(1.0)	380	Not available	Not available	Not available
18(1.5)	380	Not available	Not available	Not available
24(2.0)	480	480	Not available	Not available
30(2.5)	630	630	Not available	Not available
36(3.0)	780	780	Not available	Not available
42(3.5)	1000	1000	1000	1000
48(4.0)	1000	1000	1000	1000
54(4.5)	1300	1300	1300	1300

■ Single & Multi

Capacity (kBtu/h (RT))	Heater Capacity (kW)					
	3	5	8	10	15	20
18(1.5)	480	480	480	480	Not available	Not available
24(2.0)	480	480	480	480	Not available	Not available
36(3.0)	900	900	900	900	900	900
42(3.5)	1000	1000	1000	1000	1000	1000
48(4.0)	1000	1000	1000	1000	1000	1000

Table 71: Multi F Vertical-Horizontal Air Handling Unit Minimum Airflow by Heater Capacity.

Model No. / Nominal Capacity of Indoor Unit (Btu/h)	Heater Capacity (kW)			
	5	10	15	20
LMVN240HV (24,000)	480 CFM	480 CFM	Not Available	Not Available
LMVN360HV (36,000)	780 CFM	780 CFM	Not Available	Not Available

⚠CAUTION

Do not use les

There is risk of

Auxiliary Heat Control Static pressure drop factors

■ Multi V

Heater Capacity(kW)	Static pressure drop (in, wc)
0	0
5	-0.01
10	-0.02
15	-0.04
20	-0.06

■ Single & Multi

Heater Capacity(kW)	Static pressure drop (in, wc) (Downflow)
0	0 (0)
3, 5	-0.01 (-0.01)
8, 10	-0.02 (-0.01)
15	-0.03 (-0.01)
20	-0.04 (-0.01)

If the Auxiliary Heat Control has been installed, then the ESP value has to be set.
For every increase in static pressure by 0.01 inWC, the ESP value should be increased by 1.
If the setting ESP value is inappropriate, the provided safety device will turn off the heater according to the airflow.
* in.wc = inch Water Column, inAq

Available power cable

MODEL	POWER SUPPLY	CAPACITY (kW @ 208/230V)	HEATER AMPS. (Amps @ 208/230V)			MINIMUM CIRCUIT AMPS. (Amps @ 208/230V)			CIRCUIT BREAKER (Amps @ 208/230V)			POWER CABLE (AWG)			SIZE OF CONDUIT (inch(mm))	KNOCKOUT DIAMETER (inch(mm))
			SINGLE CIRCUIT	DUAL CIRCUIT		SINGLE CIRCUIT	DUAL CIRCUIT		SINGLE CIRCUIT	DUAL CIRCUIT		SINGLE CIRCUIT	DUAL CIRCUIT			
				L1,L3	L2,L4		L1,L3	L2,L4		L1,L3	L2,L4		L1,L3	L2,L4		
ANEH033B1	208/230, 60Hz, 1Ph	2.46 / 3	11.8 / 13	-	-	14.8 / 16.3	-	-	20 / 20	-	-	10 / 10	-	-	1/2 (21.3)	7/8 (22.2)
ANEH053B1	208/230, 60Hz, 1Ph	4.3 / 5	20.7 /21.7	-	-	25.9 / 27.2	-	-	30 / 30	-	-	10 / 10	-	-	1/2 (21.3)	7/8 (22.2)
ANEH083B2	208/230, 60Hz, 1Ph	6.56 / 8	31.6 / 34.8	-	-	40 / 43.5	-	-	50 / 50	-	-	6 / 6	-	-	1 (33.4)	1-23/64 (34.5)
ANEH103B2	208/230, 60Hz, 1Ph	8.7 / 10	41.8 / 43.5	-	-	52.3 / 54.3	-	-	60 / 60	-	-	6 / 6	-	-	1 (33.4)	1-23/64 (34.5)
ANEH153B2	208/230, 60Hz, 1Ph	13.0 / 15	-	41.8 / 43.5	20.7 / 21.7	-	52.3 / 54.3	25.9 / 27.2	-	60 /60	30 / 30	-	6 / 6	10 / 10	1-1/4(42.3)	1-23/32 (43.7)
ANEH203B1	208/230, 60Hz, 1Ph	17.3 / 20	-	41.8 / 43.5	41.8 / 43.5	-	52.3 / 54.3	52.3 / 54.3	-	60 /60	60 /60	-	6 / 6	6 / 6	1-1/4(42.3)	1-23/32 (43.7)

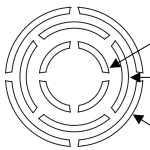

<Knockout diameter>

⚠CAUTION

Use the correctly rated power cable.

There is risk of fire or electric shock.

3. Assembly Diagram

Step 1. Open upper front panel and control box cover.

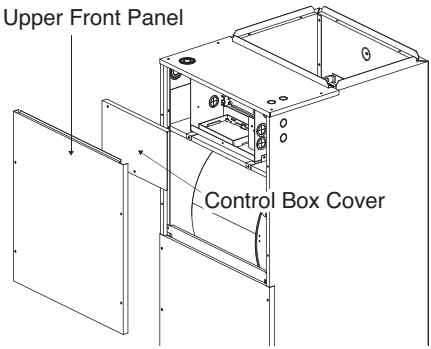

Step 2. Disconnect the three thermistors(CN_Pipe out, CN_Pipe in and CN_Room, CN_Out) , CN_EEV and CN_Motor1 connector in control box. Waste the harness and replace new one. (CN_Motor)
The new harness is provided with the Electric Heater accessories. If there are no harness, you don't need to be remove. (It may vary depending on the model)

■ Multi V

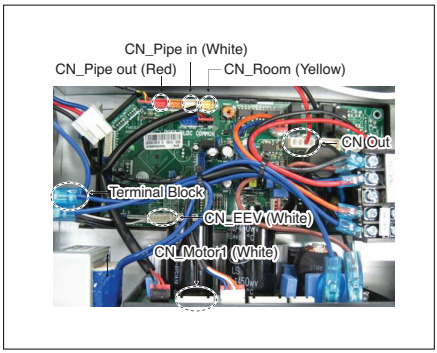

■ Single & Multi

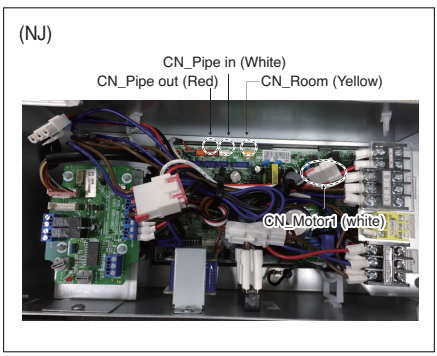

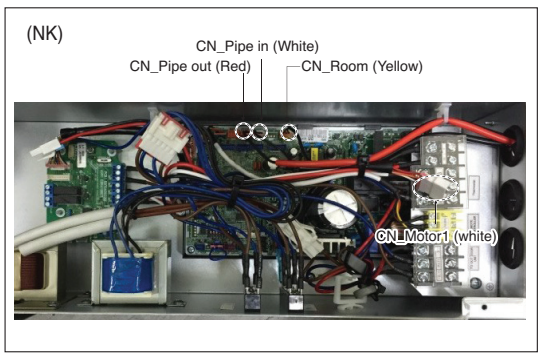

Step 3. Pull out control box. Remove heater panel.

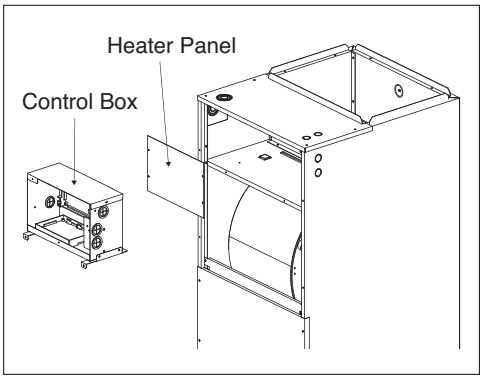

Step 4. Remove the additional mounting bracket (shown in the figure) while installing 5kW and 10kW heater with NJ chassis.

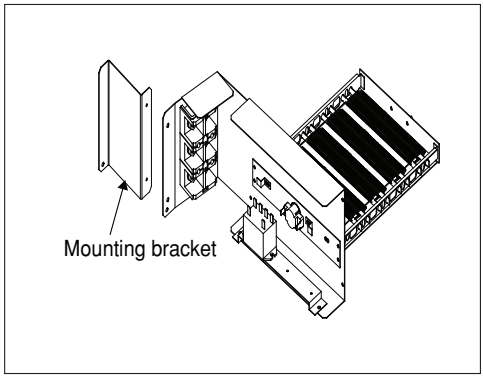

Step 5. Install heater. The bracket should be inserted in the provided slot.

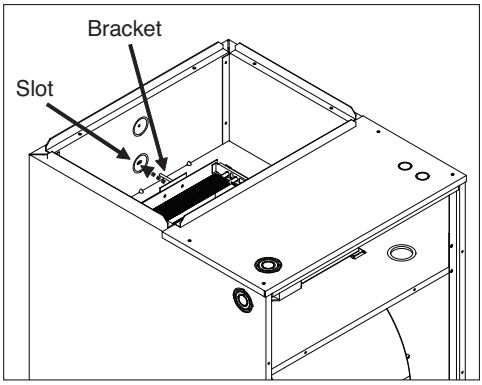

Step 6. Attach the heater to panel using the existing holes and screws.

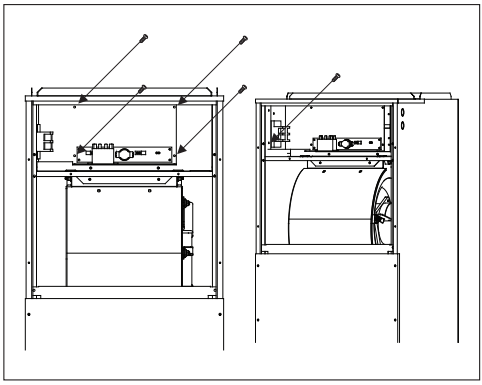

Step 7. Remove knockout and connect conduit.

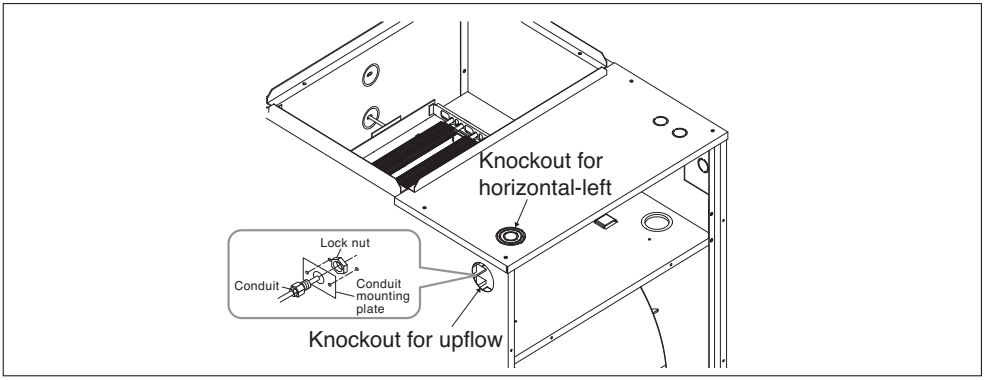

Step 8. Connect power cable to terminal block.
Connect earth cable to heater panel.

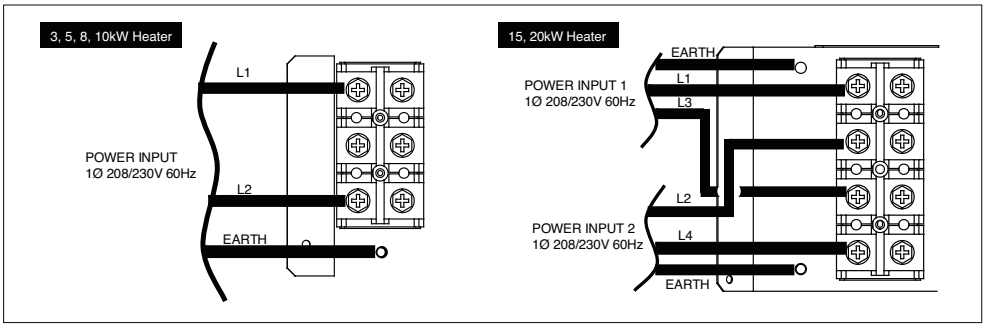

Step 9. Insert control box. Connect the three thermistors(CN_Pipe out, CN_Pipe in and CN_Room, CN_Out) , CN_EEV and CN_Motor1 connector, Heater connector in control box. Waste the harness and replace new one. (CN_Motor) The new harness is provided with the Electric Heater accessories. (It may vary depending on the model)

■ Multi V

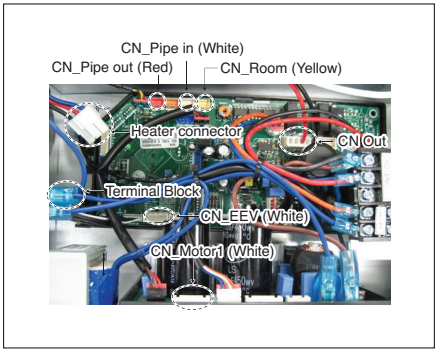

■ Single & Multi

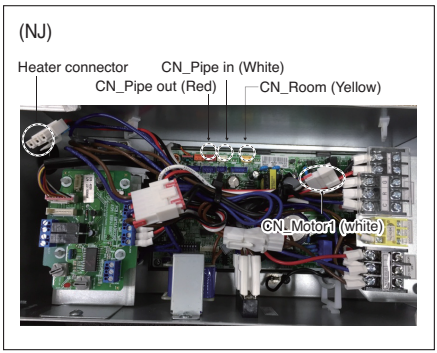

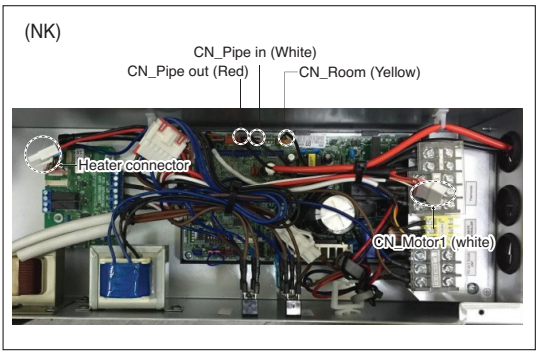

Step 10. Dip Switch Setting of Indoor unit PCB should be setting On SW 5,6

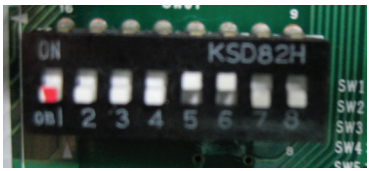

In the case of Multi V, Single & Multi Models with Auxiliary Heat Control, Dip switch 5,6 must be set ON.

- SW 5 ON: Fan operates continuously. (During defrosting or oil return operation, uninterrupted heating can be attained, as a result of continuous heater and fan operation.)
- SW5 OFF: Fan discontinuous operation (There would be reduction in heating capacity while defrosting or oil return operation.)
- SW6 ON: Automatic Heater operation (Heater operates automatically according to the heater logic without owner's intervene.)
- SW6 OFF: Heater manual operation (Owner's involvement is required for on/off operation. But the heater operation would be as per the heater logic.)

Step 11. Attach control box cover and upper front panel.

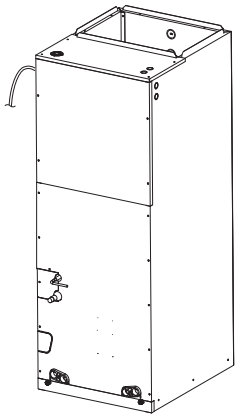

⚠ WARNING

- **When the wire is exposed, the malfunction of the machine and fire may occur due to damage to the wire.**
- **Wrong wiring may cause damage to the machine, malfunction and fire.**

NOTE

For additional operations such as emergency heating functions and their related settings please refer wireless remote controller manual.

4. Electrical Wiring

1. 3, 5kW Heater

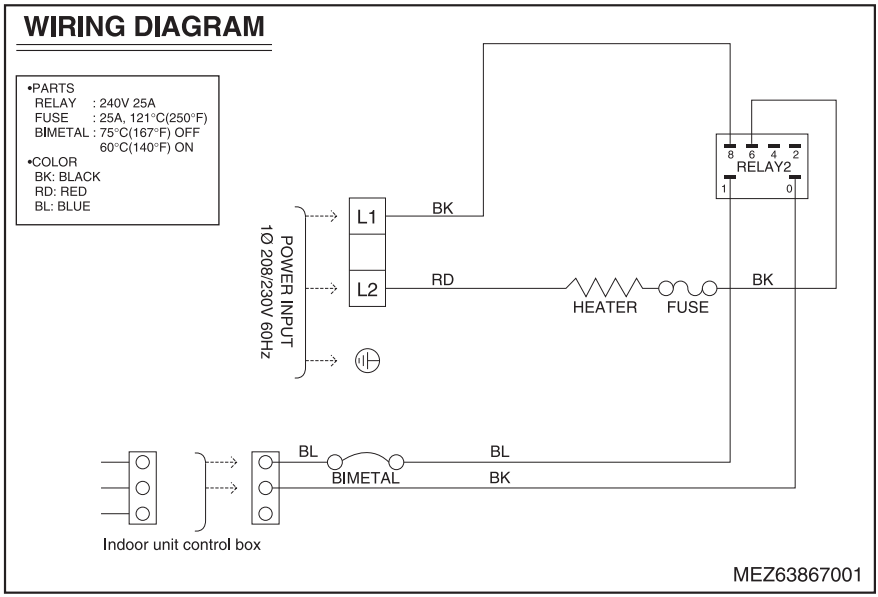

2. 8, 10kW Heater

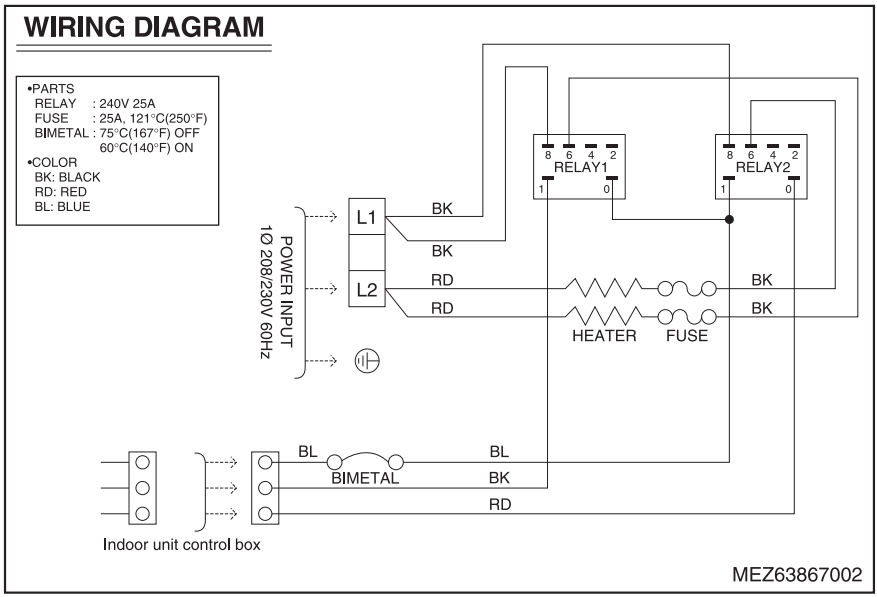

3. 15kW Heater

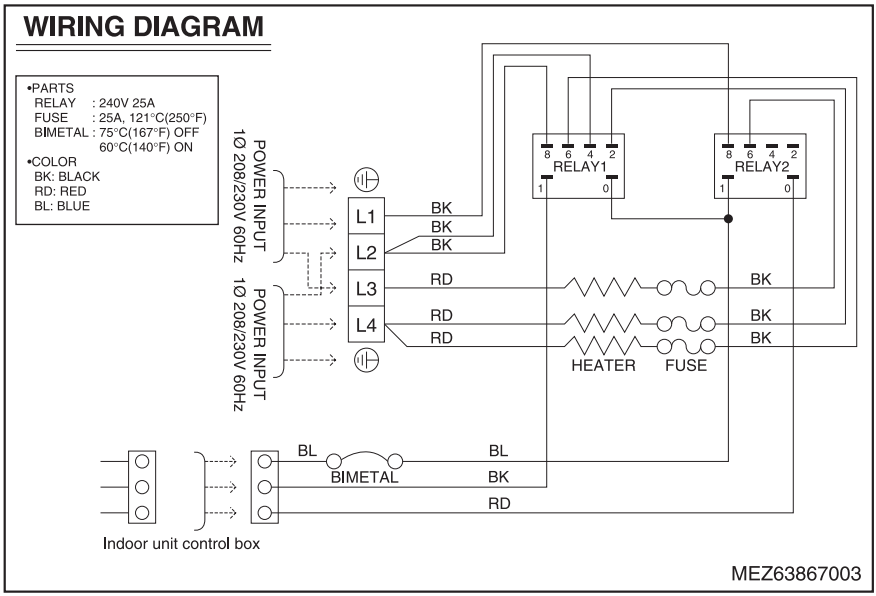

4. 20kW Heater

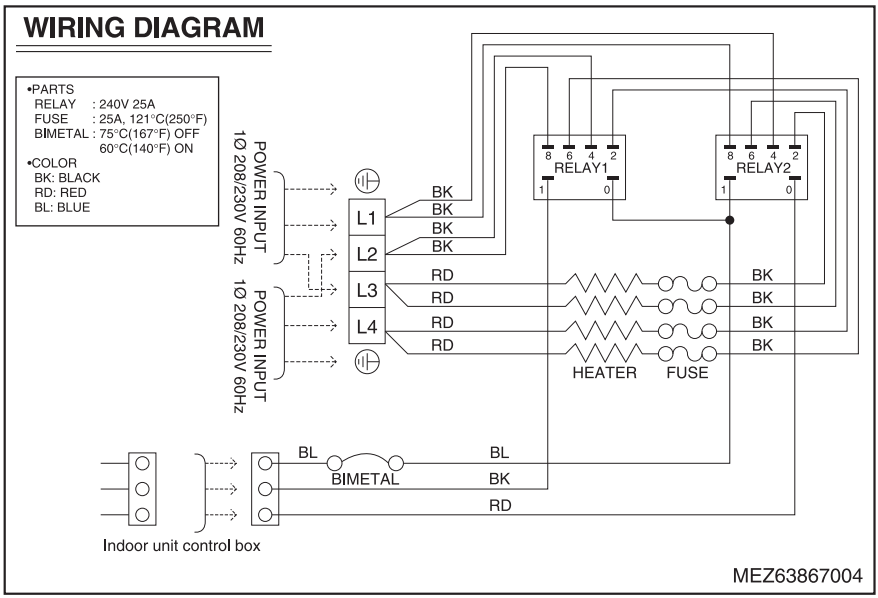

LG

Life's Good