Home Care Technical Specification

Bath Grips 2200

Stock Numbers:

- **R2250 – 9" Bath Grip**
  Polished Chrome Finish, ⅞" Rod,
  Exposed Screw Mounting
- **R2250W – 9" Bath Grip**
  White Finish, ⅞" Rod,
  Exposed Screw Mounting
- **R2260 – 16" Bath Grip**
  Polished Chrome Finish, ⅞" Rod,
  Exposed Screw Mounting
- **R2260W – 16" Bath Grip**
  White Finish, ⅞" Rod,
  Exposed Screw Mounting
- **R2270 – 24" Bath Grip**
  Polished Chrome Finish, ⅞" Rod,
  Exposed Screw Mounting
- **R2270W – 24" Bath Grip**
  White Finish, ⅞" Rod,
  Exposed Screw Mounting

Dimensions:

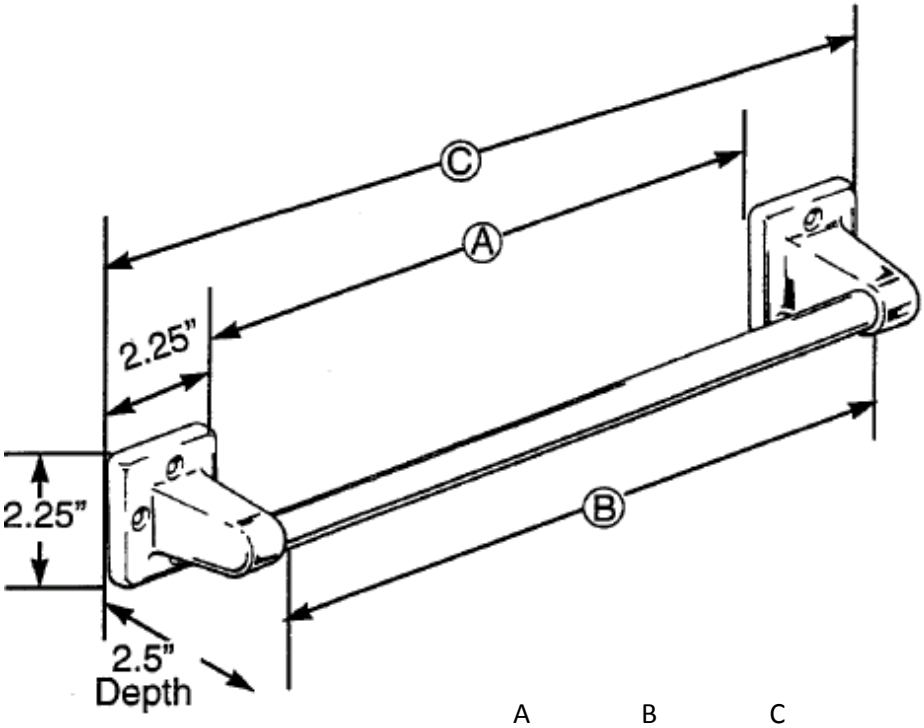

	A	B	C
2250	6.5"	7.75"	11"
2260	13.5"	14.75"	18"
2270	21.5"	22.75"	26"

Materials:

Bath Grip rods are type-304 stainless steel. Posts are cast from highest quality zinc alloy (zamac).

Installation Instructions:

1. Position assembled unit on wall in desired location.
2. Mark mounting holes.
3. Drill starter holes.
4. Mount assembled unit on wall using 2" screws (provided).

Note: Wood blocking is preferable behind all wall surfaces. If wood blocking is not available, the following optional fasteners are suggested: Tile/Masonry – Plastic or Lead Anchors; Plaster/Drywall – Toggle Bolts.

Stock Number:_____Bath Grip
By Creative Specialties

Creative Specialties® International
a Division of MOEN
Buy it for looks. Buy it for life.®

25300 AL MOEN DRIVE • NORTH OLMSTED, OH 44070 (800) 321-8809 •
FAX: (800) 848-6636 • INTERNATIONAL: (440) 962-2000 •
FAX: (440) 962-2726 CUSTOMER SERVICE (USA): 800-882-0116
WWW.MOEN.COM

©Copyright Creative Specialties International Literature #BA1680

09/25/2012 SPC10847 500001/2502
Released 05